# DS-K3Y501SX Series Flap Barrier

User Manual

# Legal Information

## About this Document

- This Document includes instructions for using and managing the Product. Pictures, charts, images and all other information hereinafter are for description and explanation only.
- The information contained in the Document is subject to change, without notice, due to firmware updates or other reasons. Please find the latest version of the Document at the Hikvision website ( ***https://www.hikvision.com*** ). Unless otherwise agreed, Hangzhou Hikvision Digital Technology Co., Ltd. or its affiliates (hereinafter referred to as "Hikvision") makes no warranties, express or implied.
- Please use the Document with the guidance and assistance of professionals trained in supporting the Product.

## About this Product

- This product can only enjoy the after-sales service support in the country or region where the purchase is made.
- If the product you choose is a video product, please scan the following QR code to obtain the "Initiatives on the Use of Video Products", and read it carefully.

## Acknowledgment of Intellectual Property Rights

- Hikvision owns the copyrights and/or patents related to the technology embodied in the Products described in this Document, which may include licenses obtained from third parties.
- Any part of the Document, including text, pictures, graphics, etc., belongs to Hikvision. No part of this Document may be excerpted, copied, translated, or modified in whole or in part by any means without written permission.
- HIKVISION and other Hikvision's trademarks and logos are the properties of Hikvision in various jurisdictions.
- Other trademarks and logos mentioned are the properties of their respective owners.

## LEGAL DISCLAIMER

- TO THE MAXIMUM EXTENT PERMITTED BY APPLICABLE LAW, THIS DOCUMENT AND THE PRODUCT DESCRIBED, WITH ITS HARDWARE, SOFTWARE AND FIRMWARE, ARE PROVIDED "AS IS" AND "WITH ALL FAULTS AND ERRORS". HIKVISION MAKES NO WARRANTIES, EXPRESS OR

IMPLIED, INCLUDING WITHOUT LIMITATION, MERCHANTABILITY, SATISFACTORY QUALITY, OR FITNESS FOR A PARTICULAR PURPOSE. THE USE OF THE PRODUCT BY YOU IS AT YOUR OWN RISK. IN NO EVENT WILL HIKVISION BE LIABLE TO YOU FOR ANY SPECIAL, CONSEQUENTIAL, INCIDENTAL, OR INDIRECT DAMAGES, INCLUDING, AMONG OTHERS, DAMAGES FOR LOSS OF BUSINESS PROFITS, BUSINESS INTERRUPTION, OR LOSS OF DATA, CORRUPTION OF SYSTEMS, OR LOSS OF DOCUMENTATION, WHETHER BASED ON BREACH OF CONTRACT, TORT (INCLUDING NEGLIGENCE), PRODUCT LIABILITY, OR OTHERWISE, IN CONNECTION WITH THE USE OF THE PRODUCT, EVEN IF HIKVISION HAS BEEN ADVISED OF THE POSSIBILITY OF SUCH DAMAGES OR LOSS.

- YOU ACKNOWLEDGE THAT THE NATURE OF THE INTERNET PROVIDES FOR INHERENT SECURITY RISKS, AND HIKVISION SHALL NOT TAKE ANY RESPONSIBILITIES FOR ABNORMAL OPERATION, PRIVACY LEAKAGE OR OTHER DAMAGES RESULTING FROM CYBER-ATTACK, HACKER ATTACK, VIRUS INFECTION, OR OTHER INTERNET SECURITY RISKS; HOWEVER, HIKVISION WILL PROVIDE TIMELY TECHNICAL SUPPORT IF REQUIRED.
- YOU AGREE TO USE THIS PRODUCT IN COMPLIANCE WITH ALL APPLICABLE LAWS, AND YOU ARE SOLELY RESPONSIBLE FOR ENSURING THAT YOUR USE CONFORMS TO THE APPLICABLE LAW. ESPECIALLY, YOU ARE RESPONSIBLE, FOR USING THIS PRODUCT IN A MANNER THAT DOES NOT INFRINGE ON THE RIGHTS OF THIRD PARTIES, INCLUDING WITHOUT LIMITATION, RIGHTS OF PUBLICITY, INTELLECTUAL PROPERTY RIGHTS, OR DATA PROTECTION AND OTHER PRIVACY RIGHTS. YOU SHALL NOT USE THIS PRODUCT FOR ANY PROHIBITED END-USES, INCLUDING THE DEVELOPMENT OR PRODUCTION OF WEAPONS OF MASS DESTRUCTION, THE DEVELOPMENT OR PRODUCTION OF CHEMICAL OR BIOLOGICAL WEAPONS, ANY ACTIVITIES IN THE CONTEXT RELATED TO ANY NUCLEAR EXPLOSIVE OR UNSAFE NUCLEAR FUEL-CYCLE, OR IN SUPPORT OF HUMAN RIGHTS ABUSES.
- IN THE EVENT OF ANY CONFLICTS BETWEEN THIS DOCUMENT AND THE APPLICABLE LAW, THE LATTER PREVAILS.

## Data Protection

- To protect data, the development of Hikvision Products incorporates privacy by design principles. For example, for Products with facial recognition features, biometrics data is stored in your Products with encryption method; for fingerprint Products, only fingerprint template will be saved, which is impossible to reconstruct a fingerprint image.
- As a data controller/processor, you may process personal data, including collection, storage, use, processing, disclosure, deletion, etc. You are advised to pay attention to and comply with applicable laws and regulations related to the protection of personal data, including without limitation, conducting security controls to safeguard personal data, such as, implementing reasonable administrative and physical security controls, conduct periodic reviews and the assessments of the effectiveness of your security controls.

**© Hangzhou Hikvision Digital Technology Co., Ltd. All rights reserved.**

# Regulatory Information

## FCC Information

Please take attention that changes or modification not expressly approved by the party responsible for compliance could void the user's authority to operate the equipment.
FCC compliance: This equipment has been tested and found to comply with the limits for a Class B digital device, pursuant to part 15 of the FCC Rules. These limits are designed to provide reasonable protection against harmful interference in a residential installation. This equipment generates, uses and can radiate radio frequency energy and, if not installed and used in accordance with the instructions, may cause harmful interference to radio communications. However, there is no guarantee that interference will not occur in a particular installation. If this equipment does cause harmful interference to radio or television reception, which can be determined by turning the equipment off and on, the user is encouraged to try to correct the interference by one or more of the following measures:
—Reorient or relocate the receiving antenna.
—Increase the separation between the equipment and receiver.
—Connect the equipment into an outlet on a circuit different from that to which the receiver is connected.
—Consult the dealer or an experienced radio/TV technician for help
This equipment should be installed and operated with a minimum distance 20cm between the radiator and your body.
FCC Conditions
This device complies with part 15 of the FCC Rules. Operation is subject to the following two conditions:
1. This device may not cause harmful interference.
2. This device must accept any interference received, including interference that may cause undesired operation.

## EU Conformity Statement

This product and - if applicable - the supplied accessories too are marked with "CE" and comply therefore with the applicable harmonized European standards listed

under the EMC Directive 2014/30/EU, RE Directive 2014/53/EU,the RoHS Directive 2011/65/EU

2012/19/EU (WEEE directive): Products marked with this symbol cannot be disposed of as unsorted municipal waste in the European Union. For proper recycling, return this product to your local supplier upon the purchase of equivalent new equipment, or dispose of it at designated collection points. For more information see: www.recyclethis.info

2006/66/EC (battery directive): This product contains a battery that cannot be disposed of as unsorted municipal waste in the European Union. See the product documentation for specific battery information. The battery is marked with this symbol, which may include lettering to indicate cadmium (Cd), lead (Pb), or mercury (Hg). For proper recycling, return the battery to your supplier or to a designated collection point. For more information see:www.recyclethis.info

# Safety Instruction

These instructions are intended to ensure that user can use the product correctly to avoid danger or property loss.

The precaution measure is divided into Dangers and Cautions:

**Dangers:** Neglecting any of the warnings may cause serious injury or death.

**Cautions:** Neglecting any of the cautions may cause injury or equipment damage.

| ⚠ | ⚠ |
|---|---|
| **Dangers:** Follow these safeguards to prevent serious injury or death. | **Cautions:** Follow these precautions to prevent potential injury or material damage. |

## ⚠ Danger:

- In the use of the product, you must be in strict compliance with the electrical safety regulations of the nation and region.
- The equipment must be connected to an earthed mains socket-outlet.
- Shock hazard! Disconnect all power sources before maintenance.
- Do not touch the bare metal contacts of the inlets after the circuit breaker is turned off. Electricity still exists.
- ϟ indicates hazardous live and the external wiring connected to the terminals requires installation by an instructed person.
- This equipment is not suitable for use in locations where children are likely to be present.
- To prevent possible hearing damage, do not listen at high volume levels for long periods.
- All the electronic operation should be strictly compliance with the electrical safety regulations, fire prevention regulations and other related regulations in your local region.
- Please use the power adapter, which is provided by normal company. The power consumption cannot be less than the required value.
- Do not connect several devices to one power adapter as adapter overload may cause over-heat or fire hazard.
- Please make sure that the power has been disconnected before you wire, install or dismantle the device.
  If the top caps should be open and the device should be powered on for maintenance, make sure:
  1. Power off the fan to prevent the operator from getting injured accidentally.
  2. Do not touch bare high-voltage components.
  3. Make sure the switch's wiring sequence is correct after maintenance.
- Please make sure that the power has been disconnected before you wire, install or dismantle the device.
- When the product is installed on wall or ceiling, the device shall be firmly fixed.

- If smoke, odors or noise rise from the device, turn off the power at once and unplug the power cable, and then please contact the service center.
- Do not ingest battery, Chemical Burn Hazard.
  This product contains a coin/button cell battery. If the coin/button cell battery is swallowed, it can cause severe internal burns in just 2 hours and can lead to death.
  Keep new and used batteries away from children. If the battery compartment does not close securely, stop using the product and keep it away from children. If you think batteries might have been swallowed or placed inside any part of the body, seek immediate medical attention.
- If the product does not work properly, please contact your dealer or the nearest service center. Never attempt to disassemble the device yourself. (We shall not assume any responsibility for problems caused by unauthorized repair or maintenance.)
- The device do not support the PoE network switch. Connecting with the PoE network switch may damage the control board.

## ⚠ Cautions:

- The equipment shall not be exposed to dripping or splashing and that no objects filled with liquids, such as vases, shall be placed on the equipment.
- Ensure correct wiring of the terminals for connection to an AC mains supply.
- The equipment has been designed, when required, modified for connection to an IT power distribution system.
- + identifies the positive terminal(s) of equipment which is used with, or generates direct current. + identifies the negative terminal(s) of equipment which is used with, or generates direct current.
- No naked flame sources, such as lighted candles, should be placed on the equipment.
- The ventilation should not be impeded by covering the ventilation openings with items, such as newspapers, table-cloths, curtains, etc. The openings shall never be blocked by placing the equipment on a bed, sofa, rug or other similar surface.
- The serial port of the equipment is used for debugging only.
- Stainless steel may be corroded in some circumstances. You need to clean and care the device by using the stainless steel cleaner. It is suggested to clean the device every month.
- Do not drop the device or subject it to physical shock, and do not expose it to high electromagnetism radiation. Avoid the equipment installation on vibrations surface or places subject to shock (ignorance can cause equipment damage).
- Do not place the device in extremely hot (refer to the specification of the device for the detailed operating temperature), cold, dusty or damp locations, and do not expose it to high electromagnetic radiation.
- The device cover for indoor use shall be kept from rain and moisture.
- Exposing the equipment to direct sun light, low ventilation or heat source such as heater or radiator is forbidden (ignorance can cause fire danger).
- Do not aim the device at the sun or extra bright places. A blooming or smear may occur otherwise (which is not a malfunction however), and affecting the endurance of sensor at the same time.

- Please use the provided glove when open up the device cover, avoid direct contact with the device cover, because the acidic sweat of the fingers may erode the surface coating of the device cover.
- Please use a soft and dry cloth when clean inside and outside surfaces of the device cover, do not use alkaline detergents.
- Please keep all wrappers after unpack them for future use. In case of any failure occurred, you need to return the device to the factory with the original wrapper. Transportation without the original wrapper may result in damage on the device and lead to additional costs.
- Improper use or replacement of the battery may result in hazard of explosion. Replace with the same or equivalent type only. Dispose of used batteries according to the instructions provided by the battery manufacturer.
- Biometric recognition products are not completely applicable to anti-spoofing environments. If you require a higher security level, use multiple authentication modes.
- Do not stay in the lane when the device is rebooting.
- RISK OF EXPLOSION IF BATTERY IS REPLACED BY AN INCORRECT TYPE. DISPOSE OF USED BATTERIES ACCORDING TO THE INSTRUCTIONS.
- SUITABLE FOR MOUNTING ON CONCRETE OR OTHER NON-COMBUSTIBLE SURFACE ONLY.
- The instructions shall require connection of the equipment protective earthing conductor to the installation protective earthing conductor.

# Available Models

| Product Name | Model | Description |
|---|---|---|
| Flap Barrier | DS-K3Y501SX-L1 | Left Pedestal 1 |
| | DS-K3Y501SX-L2 | Left Pedestal 2 |
| | DS-K3Y501SX-M1 | Middle Pedestal 1 |
| | DS-K3Y501SX-M2 | Middle Pedestal 2 |
| | DS-K3Y501SX-R | Right Pedestal |

You can follow the picture below to select pedestals:

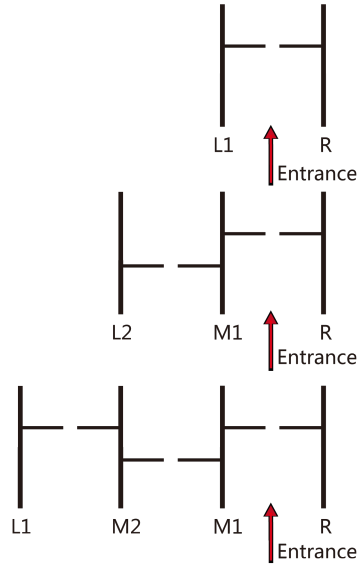

# Contents

**Chapter 1 Overview ..... 1**

1.1 Introduction ..... 1

1.2 Main Features ..... 1

**Chapter 2 System Wiring ..... 3**

**Chapter 3 Installation ..... 7**

3.1 Disassemble Pedestals ..... 7

3.2 Install Pedestals ..... 7

**Chapter 4 General Wiring ..... 11**

4.1 Components Introduction ..... 11

4.2 Wiring Electric Supply ..... 13

4.3 Wire Interconnecting Cable ..... 13

4.4 Face Recognition Terminal Power Supply Wiring ..... 14

4.5 Terminal Description ..... 15

4.5.1 Main Control Board Terminal Description ..... 15

4.5.2 Sub Control Board Terminal Description ..... 16

4.5.3 Access Control Board Terminal Description ..... 17

4.5.4 Access Control Board Serial Port ID Description ..... 20

4.5.5 RS-485 Wiring ..... 23

4.5.6 RS-232 Wiring ..... 24

4.5.7 Wiegand Wiring ..... 25

4.5.8 Barrier Control Wiring ..... 25

4.5.9 Alarm Output Wiring ..... 27

4.5.10 Exit Button Wiring ..... 27

**Chapter 5 Device Settings ..... 29**

5.1 Pair Keyfob (Optional) ..... 29

5.2 Initialize Device ..... 30

5.3 Switch to RS-485/RS-232 Mode ..... 31
5.4 Switch Relay Output Mode (NO/NC) ..... 33
5.4.1 Barrier Control Relay Output Mode ..... 33
5.4.2 Alarm Relay Output Mode (NO/NC) ..... 34
**Chapter 6 Activation ..... 35**
6.1 Activate via SADP ..... 35
6.2 Activate Device via Client Software ..... 36
**Chapter 7 Client Software Configuration ..... 38**
7.1 Configuration Flow of Client Software ..... 38
7.2 Device Management ..... 38
7.2.1 Add Device ..... 39
7.2.2 Reset Device Password ..... 45
7.3 Group Management ..... 46
7.3.1 Add Group ..... 46
7.3.2 Import Resources to Group ..... 46
7.3.3 Edit Resource Parameters ..... 47
7.3.4 Remove Resources from Group ..... 47
7.4 Person Management ..... 47
7.4.1 Add Organization ..... 48
7.4.2 Configure Basic Information ..... 48
7.4.3 Issue a Card by Local Mode ..... 49
7.4.4 Upload a Face Photo from Local PC ..... 51
7.4.5 Take a Photo via Client ..... 51
7.4.6 Collect Face via Access Control Device ..... 53
7.4.7 Collect Fingerprint via Client ..... 54
7.4.8 Collect Fingerprint via Access Control Device ..... 55
7.4.9 Configure Access Control Information ..... 56
7.4.10 Customize Person Information ..... 57

7.4.11 Configure Resident Information ..... 58
7.4.12 Configure Additional Information ..... 58
7.4.13 Import and Export Person Identify Information ..... 59
7.4.14 Import Person Information ..... 59
7.4.15 Import Person Pictures ..... 60
7.4.16 Export Person Information ..... 60
7.4.17 Export Person Pictures ..... 61
7.4.18 Get Person Information from Access Control Device ..... 61
7.4.19 Move Persons to Another Organization ..... 62
7.4.20 Issue Cards to Persons in Batch ..... 62
7.4.21 Report Card Loss ..... 63
7.4.22 Set Card Issuing Parameters ..... 63
7.5 Configure Schedule and Template ..... 64
7.5.1 Add Holiday ..... 64
7.5.2 Add Template ..... 65
7.6 Set Access Group to Assign Access Authorization to Persons ..... 66
7.7 Configure Advanced Functions ..... 69
7.7.1 Configure Device Parameters ..... 69
7.7.2 Configure Remaining Open/Closed ..... 75
7.7.3 Configure Multi-Factor Authentication ..... 76
7.7.4 Configure Custom Wiegand Rule ..... 79
7.7.5 Configure Card Reader Authentication Mode and Schedule ..... 80
7.7.6 Configure First Person In ..... 82
7.7.7 Configure Anti-Passback ..... 83
7.7.8 Configure Device Parameters ..... 84
7.8 Configure Linkage Actions for Access Control ..... 85
7.8.1 Configure Client Actions for Access Event ..... 85
7.8.2 Configure Device Actions for Access Event ..... 86

7.8.3 Configure Device Actions for Card Swiping ..... 88
7.9 Door Control ..... 89
7.9.1 Control Door Status ..... 89
7.9.2 Check Real-Time Access Records ..... 91
7.10 Event Center ..... 91
7.10.1 Enable Receiving Event from Devices ..... 91
7.10.2 View Real-Time Events ..... 92
7.10.3 Search Historical Events ..... 93
7.11 Remote Configuration via Client Software ..... 97
7.11.1 Check Device Information ..... 97
7.11.2 Edit Device Name ..... 97
7.11.3 Edit Time ..... 98
7.11.4 Set System Maintenance ..... 98
7.11.5 Manage Network User ..... 99
7.11.6 Manage Keyfob User ..... 99
7.11.7 Set Security ..... 99
7.11.8 Configure Lane Parameters ..... 100
7.11.9 Configure Screen Parameters ..... 100
7.11.10 Configure Screen Parameters ..... 101
7.11.11 Configure Advanced Network ..... 102
7.11.12 Configure Audio File ..... 102
7.11.13 Configure Passing Record ..... 103
7.11.14 Configure Parameters for Lane Controller ..... 103
7.11.15 Configure IR Detectors ..... 105
7.11.16 View Relay Status ..... 105
**Appendix A. Tips for Scanning Fingerprint ..... 106**
**Appendix B. DIP Switch ..... 108**
B.1 DIP Switch Description ..... 108

B.2 DIP Switch Corresponded Functions ..... 108

**Appendix C. Event and Alarm Type ..... 110**

**Appendix D. Table of Audio Index Related Content ..... 111**

**Appendix E. Error Code Description ..... 112**

**Appendix F. Communication Matrix and Device Command ..... 114**

# Chapter 1 Overview

## 1.1 Introduction

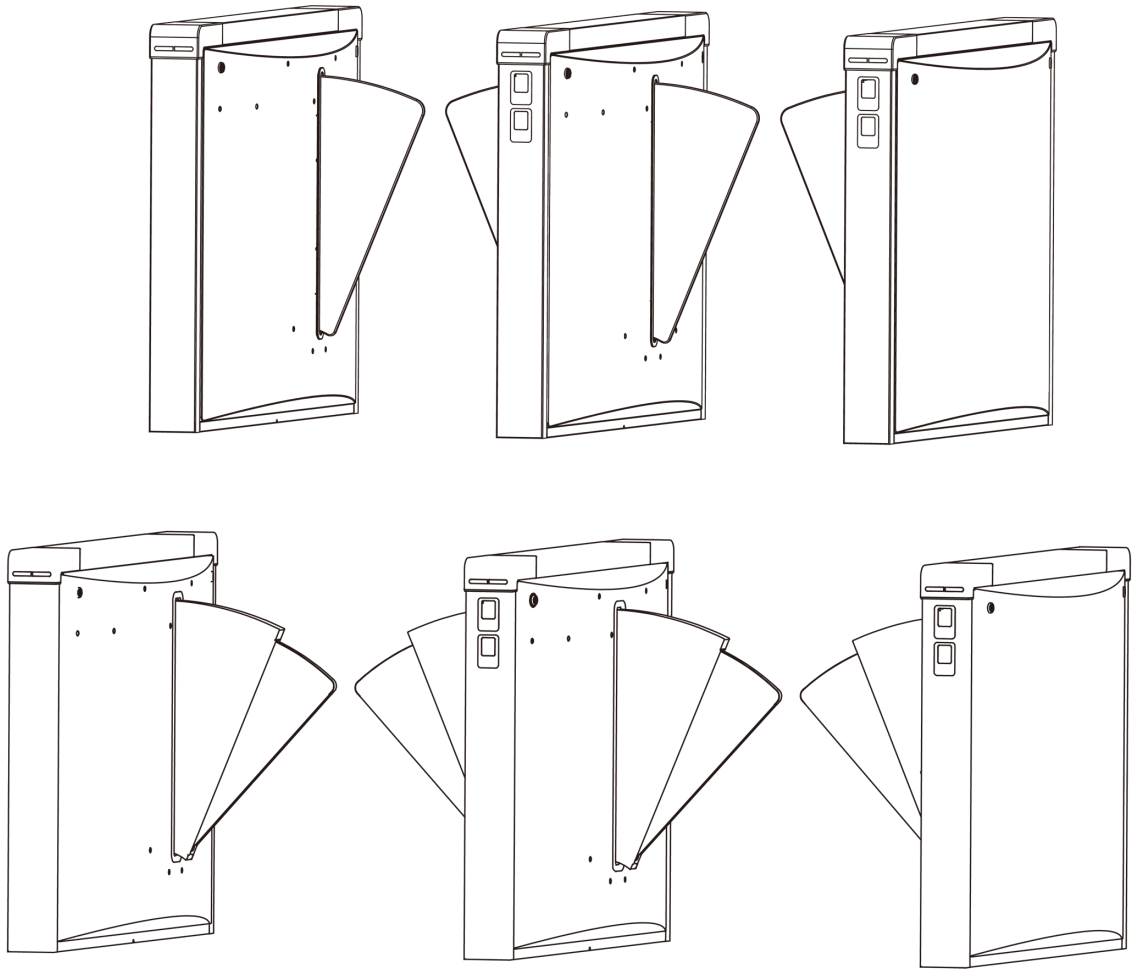

**Figure 1-1 Appearance**

The flap barrier designed to detect unauthorized entrance or exit. By adopting the flap barrier integratedly with the access control system, person should authenticate to pass through the lane via presenting IC or ID card, scanning QR code, etc. It is widely used in attractions, stadiums, construction sites, residences, etc.

## 1.2 Main Features

- 32-bit high-speed processor
- TCP/IP network communication

The communication data is specially encrypted to relieve the concern of privacy leak
- Identity authentication before passing through the turnstile
- Remaining open/closed mode and passing status selectable
- The barrier will be open when people are nipped
- Anti-forced-accessing
  The barrier will be locked automatically without open-barrier signal.
- Self-detection, Self-diagnostics, and automatic alarm
- Audible and visual alarm will be triggered when detecting intrusion, tailgating, reverse passing, and climbing over barrier
- IP confliction detection
- Remote control and management
- Online/offline operation
- LED indicates the entrance/exit and passing status
- Barrier remains open when powered down
- Fire alarm passing
  When the fire alarm is triggered, the barrier will be open automatically for emergency evacuation
- Valid passing duration settings
  System will cancel the passing permission if a person does not pass through the lane within the valid passing duration
- Opens/closes barrier according to the schedule template
- Up to 3000 visitor cards and up to 60,000 non-visitor cards can be added
- Up to 180,000 presenting card events can be recorded
- Adjustable indicator light brightness

# Chapter 2 System Wiring

The preparation before installation and general wiring.

**Steps**

1. Draw a central line on the installation surface of the left or right pedestal.
2. Draw other parallel lines for installing the other pedestals.

**Note**

The distance between the nearest two line is L+300 mm. L represents the lane width.

3. Slot on the installation surface and dig installation holes according to the hole position diagram.

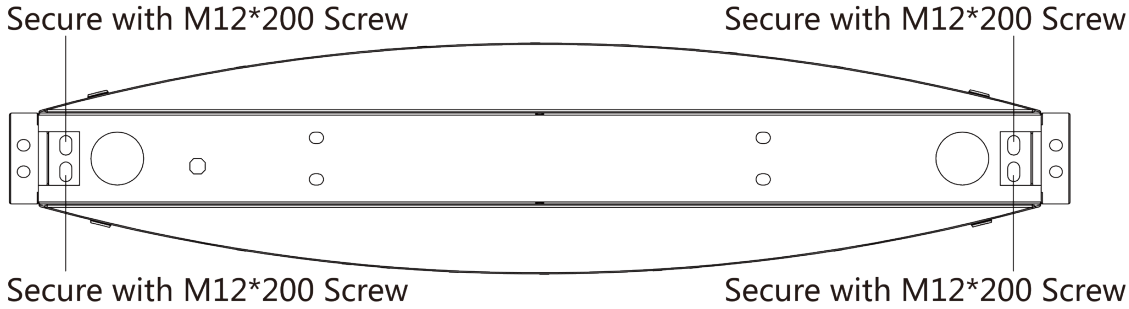


**Figure 2-1 Hole Position Diagram**

4. Bury cables. Each lane buries 1 network cable and 1 high voltage cable. For details, see the system wiring diagram below.

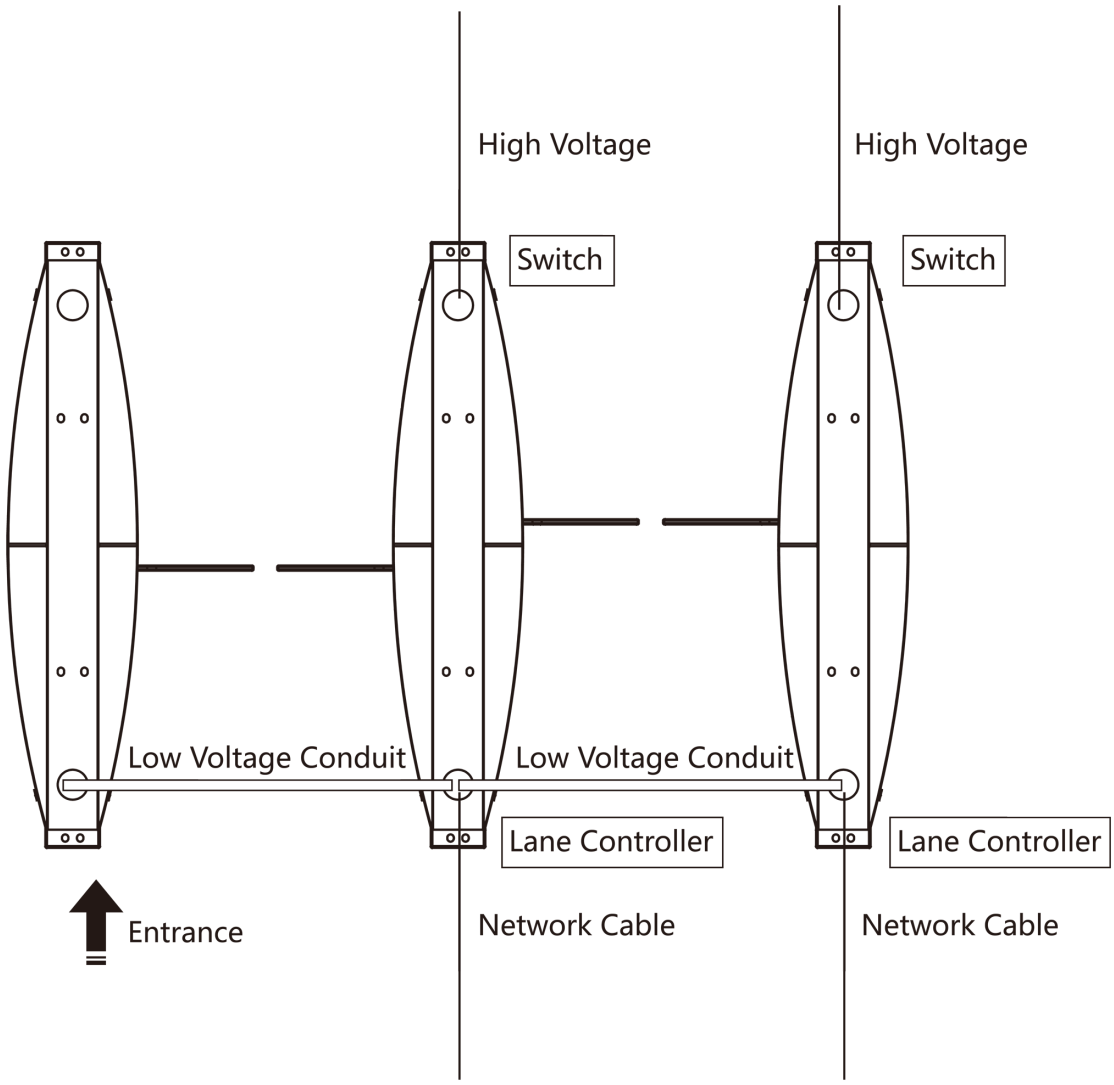


**Figure 2-2 System Wiring Diagram (General Wiring)**

**Note**

- The supplied interconnecting cable length is 5.5 m.
- The suggested inner diameter of the low voltage conduit is larger than 30 mm.
- If you want to bury both of the AC power cord and the low voltage cable at the entrance, the two cables should be in separated conduits to avoid interference.
- If you want to bury both of the AC power cord and the low voltage cable at the entrance, the two cables should be in separated conduits to avoid interference.
- The external AC power cord should be double-insulated.
- The network cable must be CAT5e or the network cable has better performance. And the suggested network cable length should be less than 100 m.

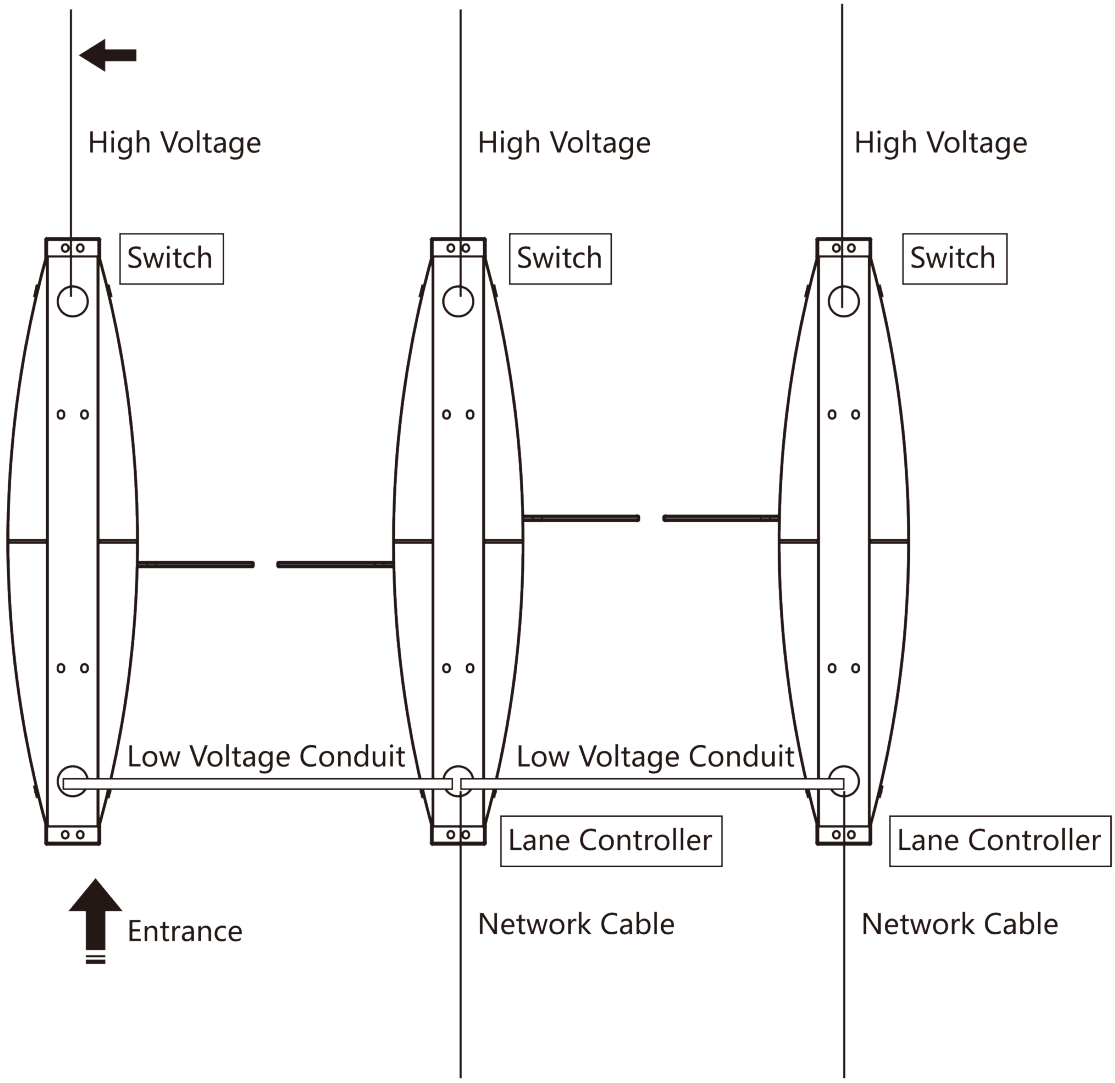


**Figure 2-3 Wire Face Recognition Terminal**

**Note**

- The left pedestal and the middle pedestal should bury interconnecting cables for connecting the face recognition terminal.
- The face recognition terminal installed on the left pedestal will gain power from the sub switch, which should connect to high voltage.
- The supplied interconnecting cable length is 5.5 m.
- The suggested inner diameter of the low voltage conduit is larger than 30 mm.
- If you want to bury both of the AC power cord and the low voltage cable at the entrance, the two cables should be in separated conduits to avoid interference.
- If more peripherals are required to connect, you should increase the conduit diameter or bury another conduit for the external cables.

- The external AC power cord should be double-insulated.
- The network cable must be CAT5e or the network cable has better performance. And the suggested network cable length should be less than 100 m.

# Chapter 3 Installation

## 3.1 Disassemble Pedestals

Before installation, you should use the key to open the pedestals.
View the pictures below to find the lock holes.

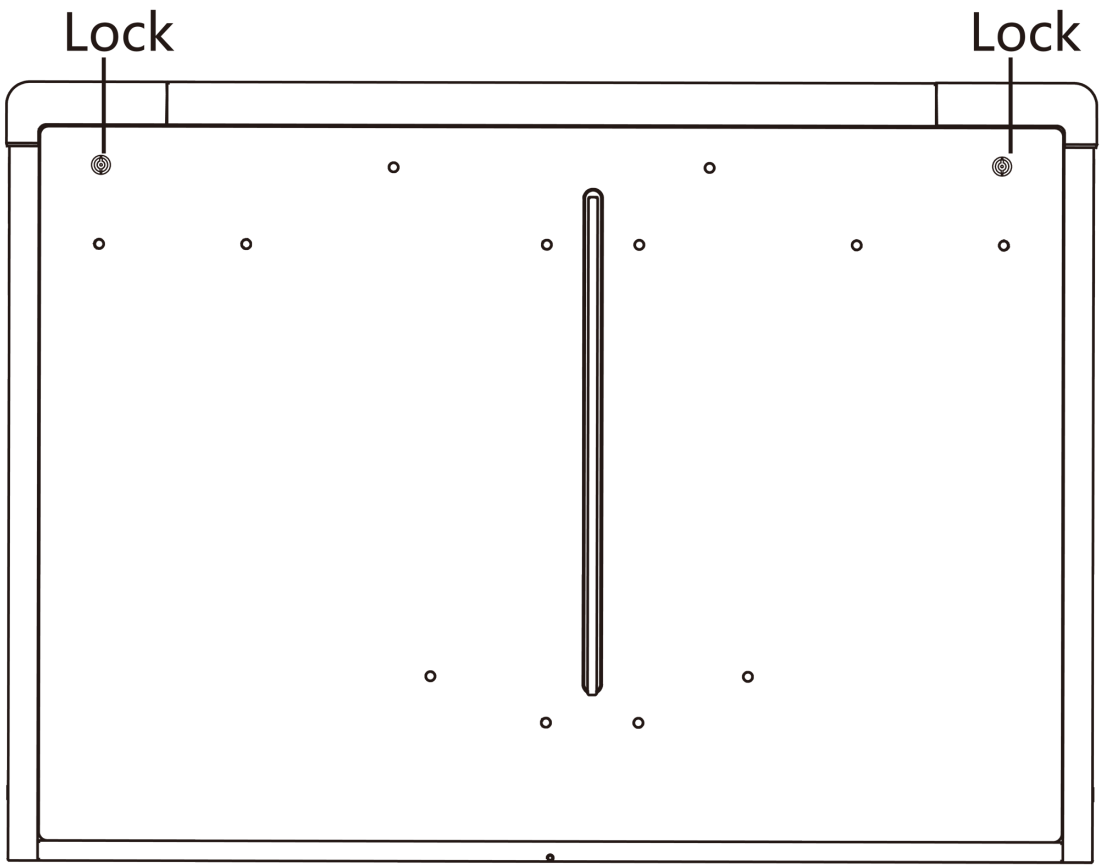


**Figure 3-1 Lock Holes**

## 3.2 Install Pedestals

**Before You Start**
Prepare for the installation tools, check the device and the accessories, and clear the installation base.

**Steps**

**Note**

- The device should be installed on the concrete surface or other non-flammable surfaces.
- The dimension is as follows.

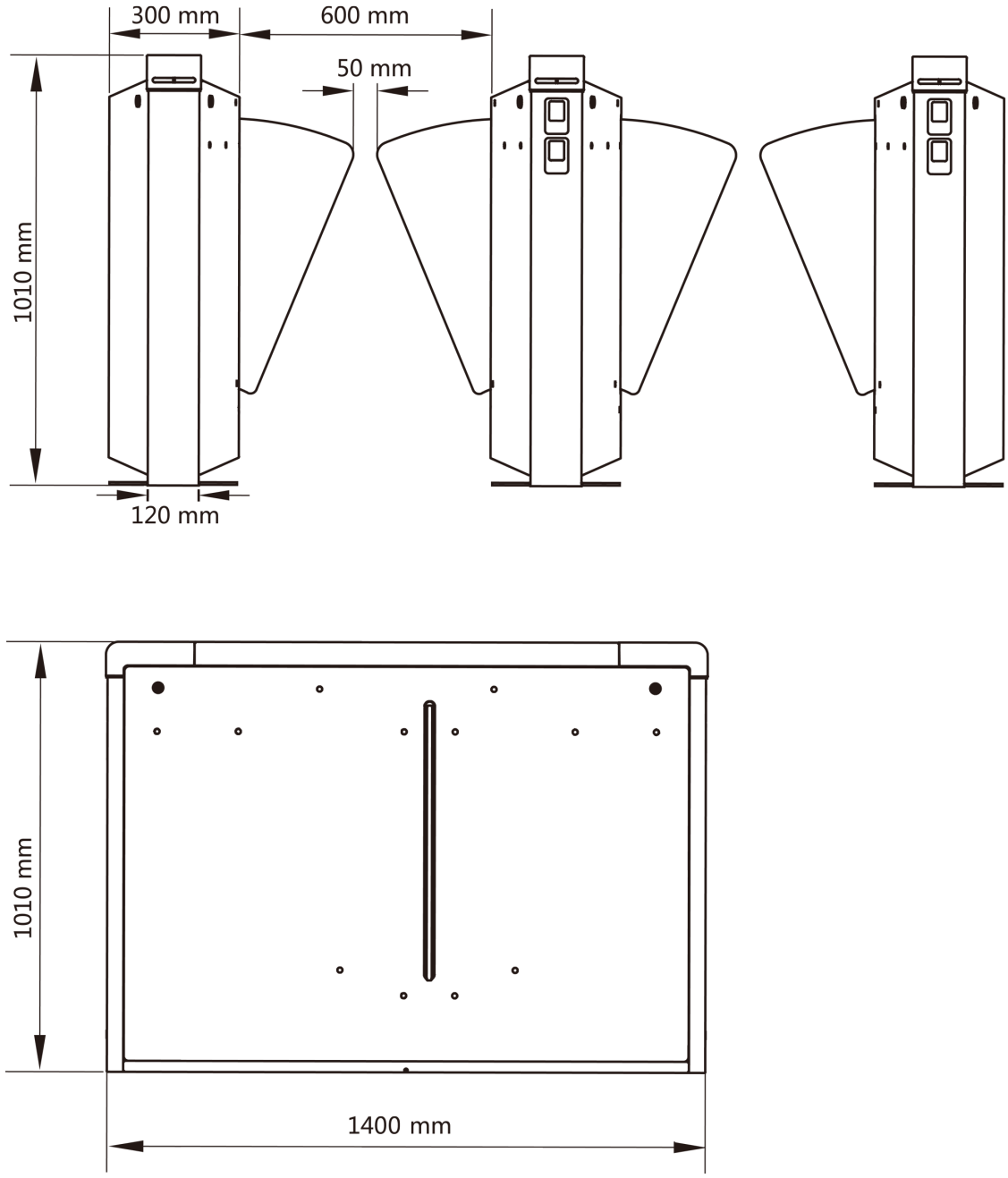


**Figure 3-2 Dimension**

1. Prepare for the installation tools, check the components, and prepare for the installation base.
2. Drill holes on the ground according to the installation holes on the pedestals and insert the expansion sleeves.
3. Seal the bottom of the turnstile to avoid water from entering.
4. According to the entrance and exit marks on the pedestals, move the pedestals to the corresponded positions.

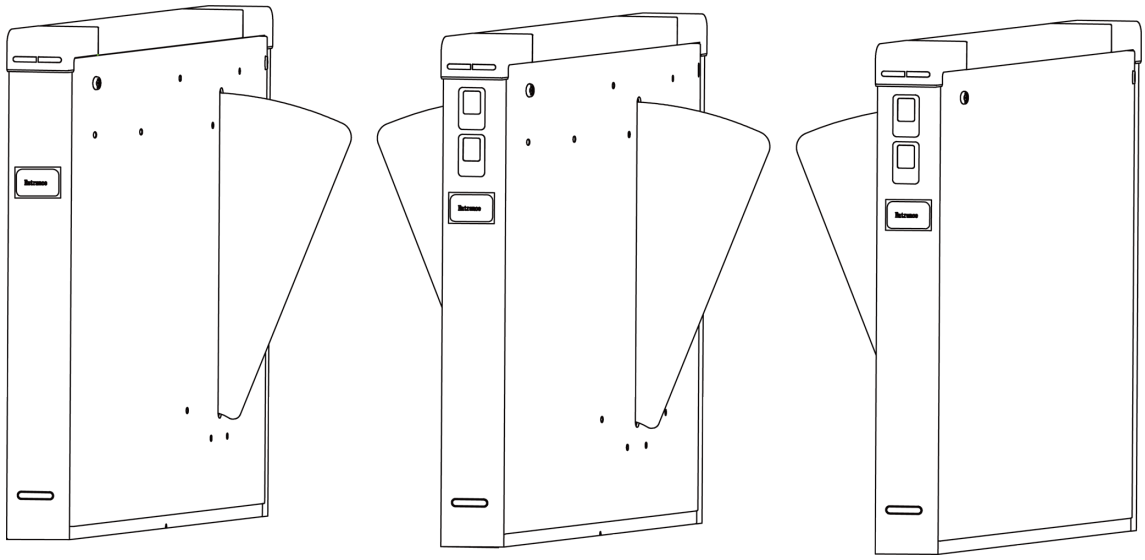

**Figure 3-3 Entrance Mark on Pedestal**

**Note**

Make sure the installation holes on the pedestals and the base are aligned with each other.

5. Secure the pedestals with expansion bolts.

**Note**

- Do not immerse the pedestal in the water. In special circumstances, the immersed height should be no more than 150 mm.
- The installation footprint is as follows:

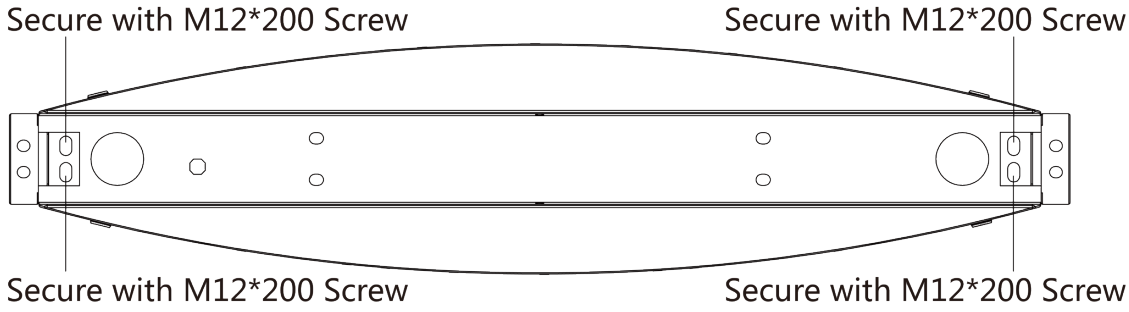


**Figure 3-4 Installation Footprint**

**6.** Remove the auxiliary sticks at the bottom of the device after the device is fully installed. And then use the concrete to seal the holes.

# Chapter 4 General Wiring

## 4.1 Components Introduction

By default, basic components of the turnstile are connected well. The pedestals can communicate by wiring the interconnecting cables. And the turnstile supports wiring the AC electric supply for the whole system's power supply.

**Note**

The voltage fluctuation of the electric supply is between 100 VAC and 220 VAC, 50 to 60 Hz.

The picture displayed below describes each component's position on the turnstile.

**Note**

The diagram is for reference only.

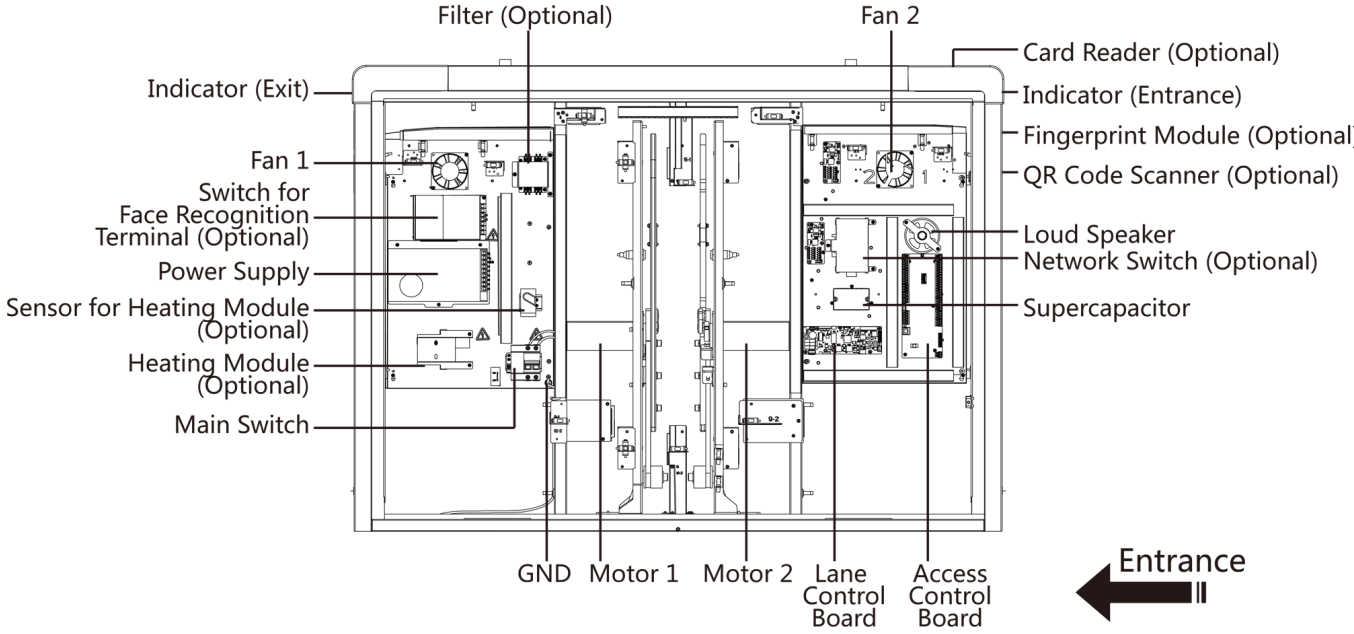


**Figure 4-1 Components Diagram 1**

**Note**

For details about wiring arrangement, refers to the actual device.

The picture displayed below describes the IR adapter and the IR sending/receiving module and their corresponding number on the pedestal.

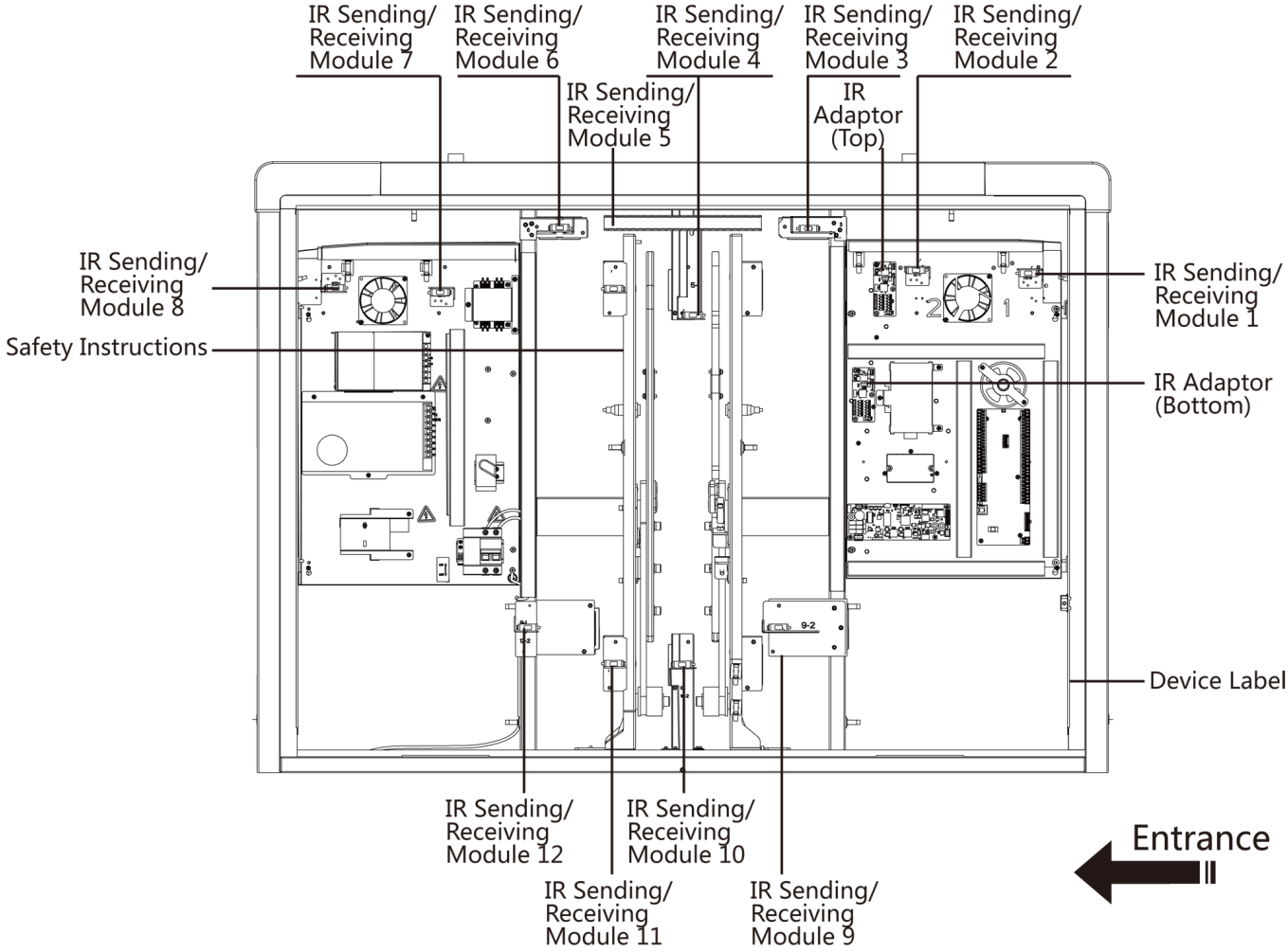


**Figure 4-2 Components 2**

**Note**

- For details about wiring arrangement, refers to the actual device.
- If the turnstile contains two lanes, standing at the entrance position, the IR modules on the left pedestal are the IR sending modules. The IR modules on the right pedestal are the IR receiving modules. The IR modules on the left side of the middle pedestal are the IR receiving modules, while the IR modules on the right side of the middle pedestal are the IR sending modules.
- Warning tags can be viewed on the side panel of each pedestal.
- Safety Instructions can be viewed on the middle panel inside the pedestal.

## 4.2 Wiring Electric Supply

Wire electric supply with the switch in the pedestal. Terminal L and terminal N are on the switch, while terminal PE should connect to a ground wire (yellow and green wire).

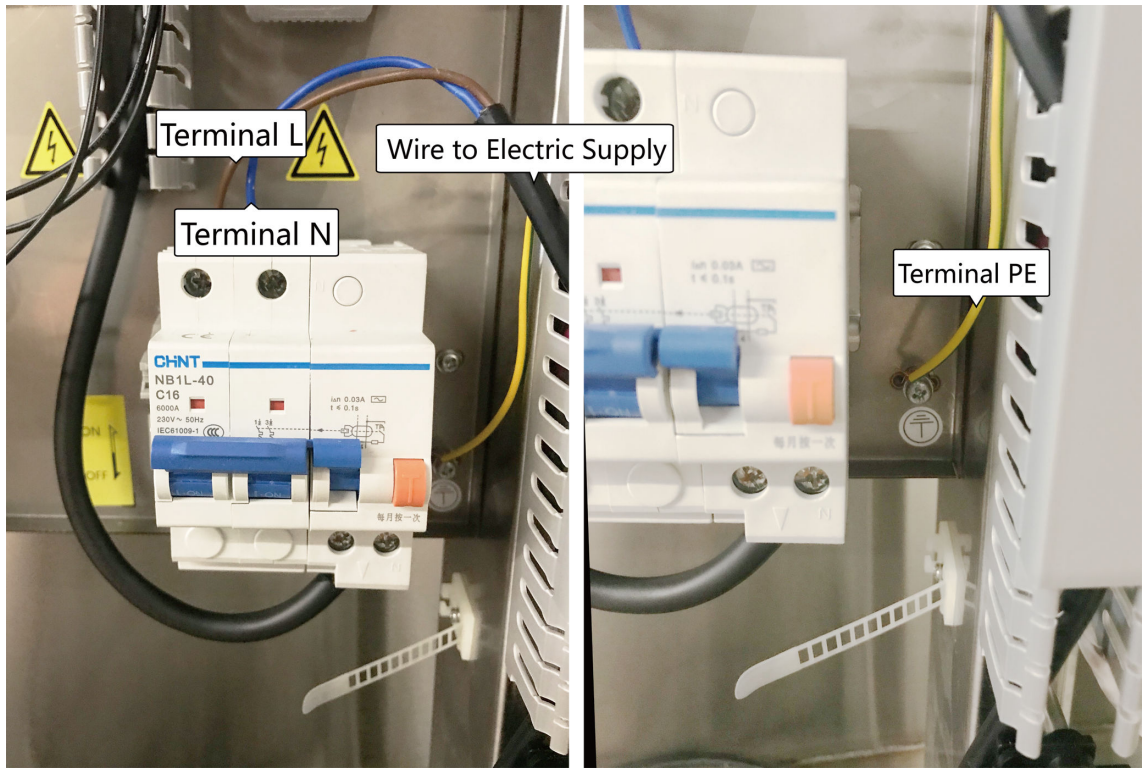


**Note**

- The cable bare part should be no more than 8 mm. It is suggested that you can immerse the bare part into the liquid tin. If possible, wear an insulation cap at the end of the bare cable. Make sure there’s no bare copper or cable after the wiring.
- The Terminal L and the Terminal N cannot be wired reversely. Do not wire the input and output terminal reversely.
- To avoid people injury and device damage, when testing, the ground resistance of the equipotential points should not be larger than 2 Ω。
- Use the device in conjunction with an UPS.

## 4.3 Wire Interconnecting Cable

You should use interconnecting cables to connect the main lane board and the sub lane board for components communication.

The picture displayed below describes the cable hole's position on the pedestals.

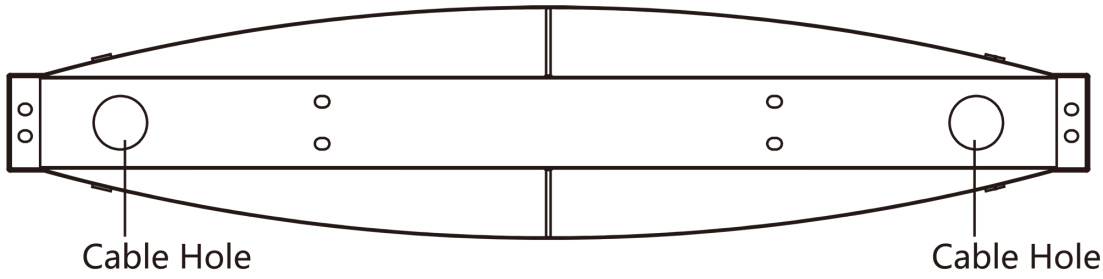


**Figure 4-3 Cable Hole of Interconnecting Cable**

Follow the instructions below to connect the interconnecting cable.

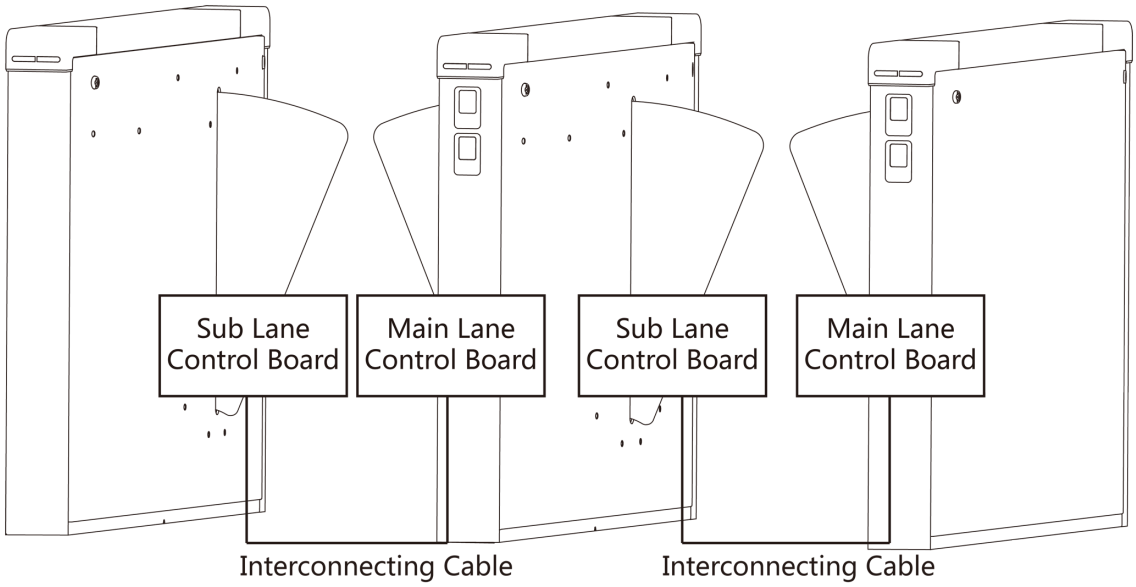


**Figure 4-4 Connect Interconnecting Cable**

## 4.4 Face Recognition Terminal Power Supply Wiring

You should wire the power supply terminal on the 12 V power supply component if you connect the turnstile to the face recognition terminal.

The terminal's position is shown as follows:

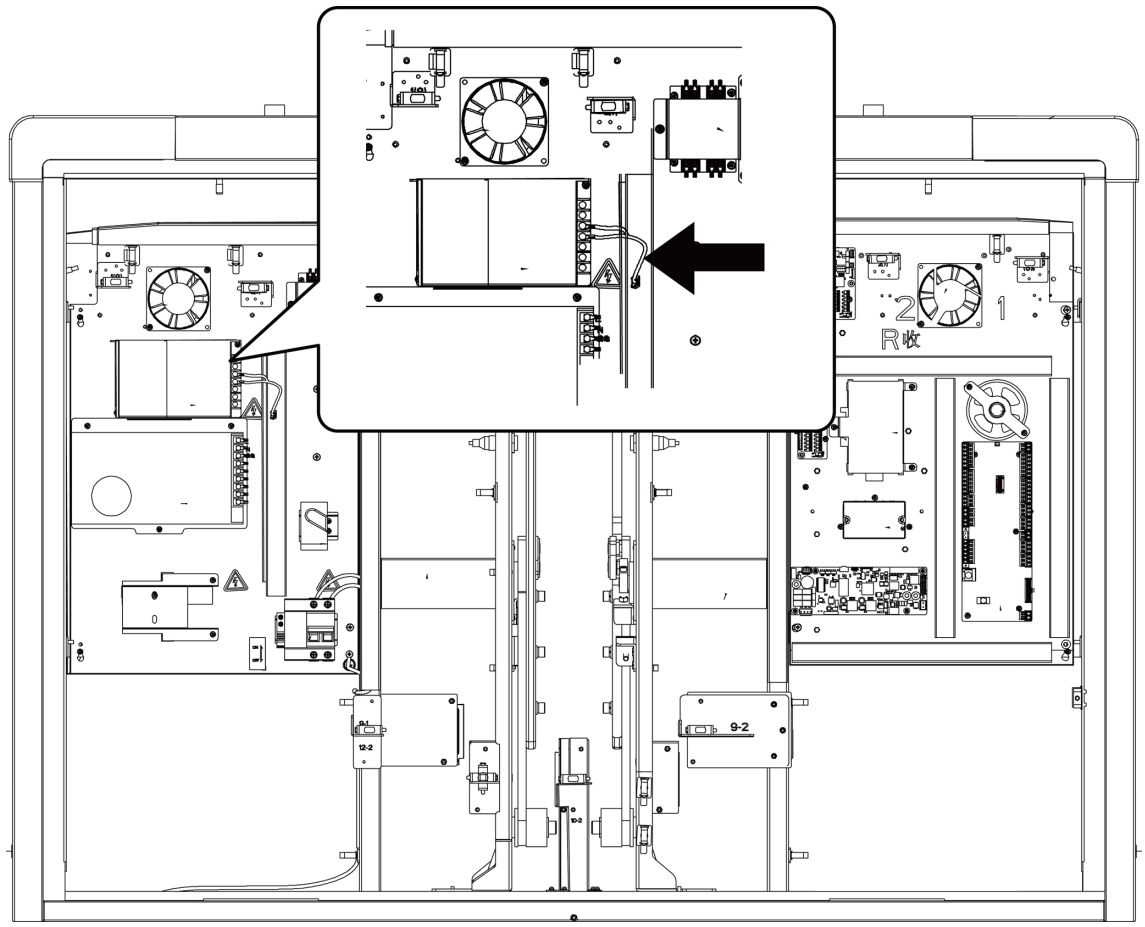

**Figure 4-5 Face Recognition Terminal Power Supply Wiring Position**

## 4.5 Terminal Description

The lane controller contains main lane controller and sub lane controller, which controls the IR beams, motor, and other components' work.

### 4.5.1 Main Control Board Terminal Description

The main lane control board contains power supply interface, supercapacitor interface, brake interface (reserved), motor drive interface, light board interface (reserved), motor encoder interface, door open position detection interface (reserved), debug port, lane communication interface, interconnecting interface, and DIP switch (reserved).

The picture displayed below is the main control board diagram.

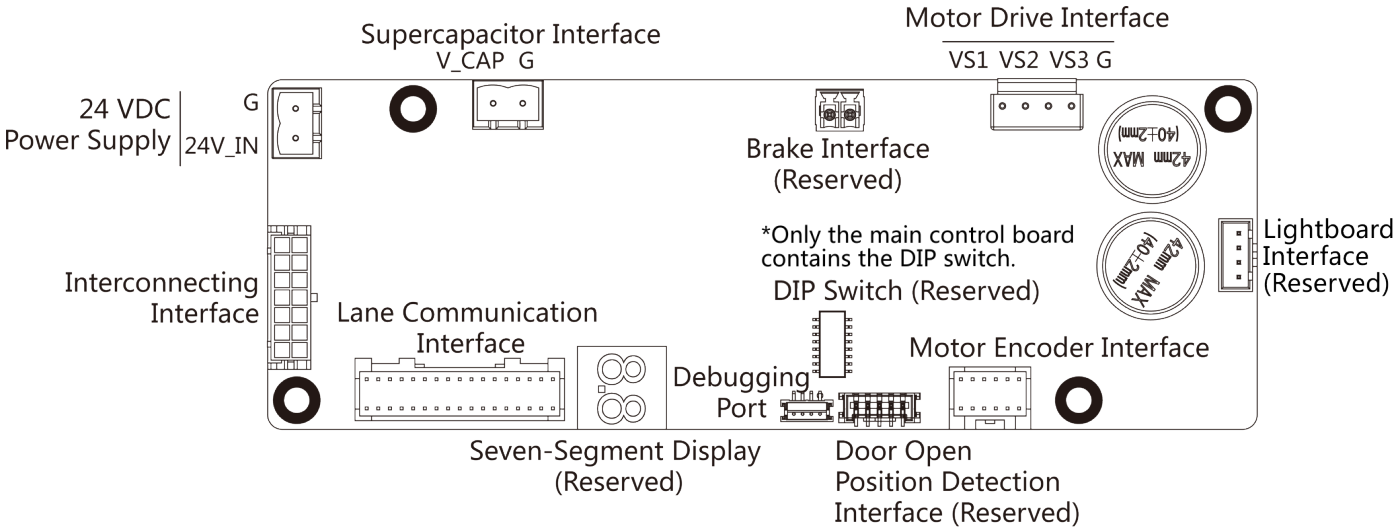


**Figure 4-6 Main Control Board**

## 4.5.2 Sub Control Board Terminal Description

The sub lane control board contains power supply interface, supercapacitor interface, brake interface (reserved), motor drive interface, light board interface (reserved), motor encoder interface, door open position detection interface (reserved), debug port, lane communication interface, and interconnecting interface.

The picture displayed below is the sub control board diagram.

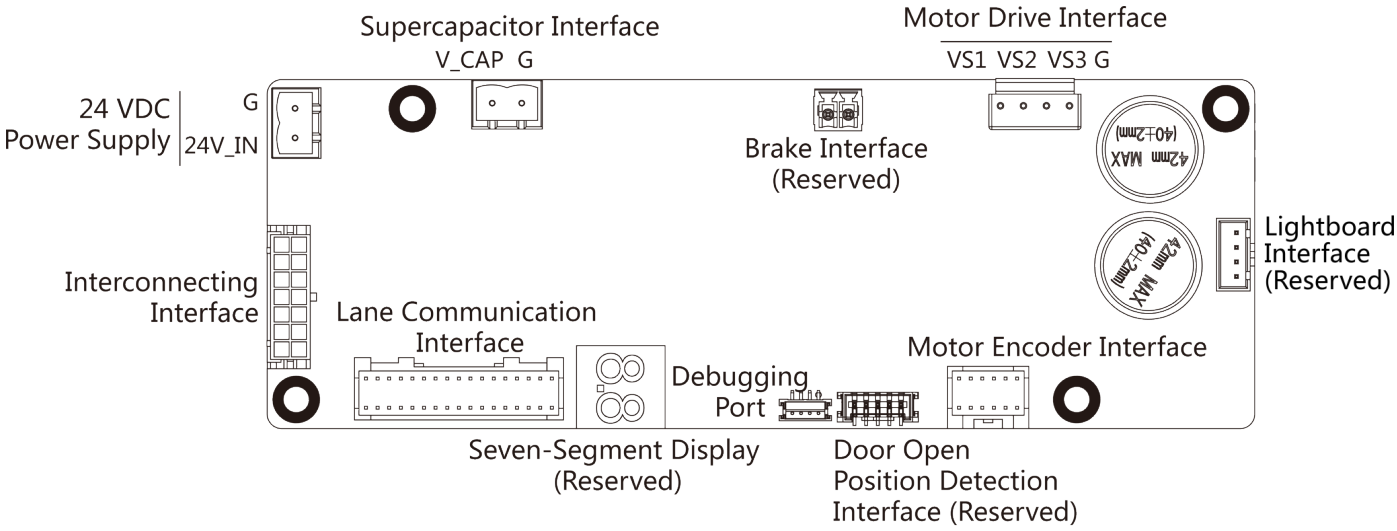


**Figure 4-7 Sub Control Board**

### 4.5.3 Access Control Board Terminal Description

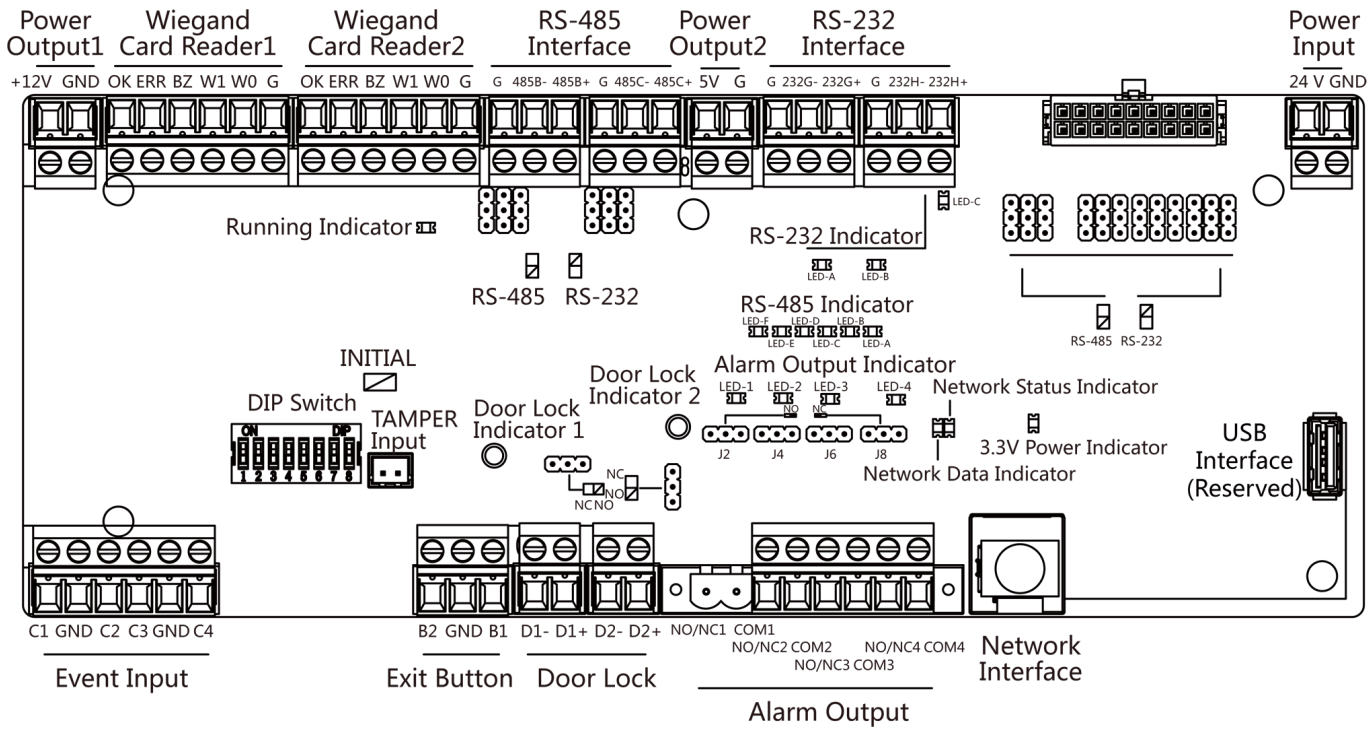


**Figure 4-8 Access Control Board**

**Table 4-1 Access Control Board Terminal Description**

| Access Control Board Terminal Description | | |
|---|---|---|
| Power Output 1 | +12 V | Power Output |
| | GND | Grounding |
| Wiegand Card Reader 1 | OK | Indicator of Card Reader Control Output (Invalid Card Output) |
| | ERR | Indicator of Card Reader Control Output (Valid Card Output) |
| | BZ | Card Reader Buzzer Control Output |
| | W1 | Wiegand Head Read Data Input Data1 |
| | W0 | Wiegand Head Read Data Input Data0 |
| | GND | Grounding |

| Access Control Board Terminal Description | | |
|---|---|---|
| Wiegand Card Reader 2 | OK | Indicator of Card Reader Control Output (Invalid Card Output) |
| | ERR | Indicator of Card Reader Control Output (Valid Card Output) |
| | BZ | Card Reader Buzzer Control Output |
| | W1 | Wiegand Head Read Data Input Data1 |
| | W0 | Wiegand Head Read Data Input Data0 |
| | GND | Grounding |
| RS-485 Interface | GND | Grounding |
| | RS-485 B- | Connect to Card Reader RS485- |
| | RS-485 B+ | Connect to Card Reader RS485+ |
| | GND | Grounding |
| | RS-485 C- | Connect to Card Reader RS485- |
| | RS-485 C+ | Connect to Card Reader RS485+ |
| Power Output 2 | 5 V | 5 VDC Power Output |
| | GND | 5 VDC Grounding |
| RS-232 Interface | GND | Grounding |
| | RS-232 G- | Connect to Card Reader RS232- |
| | RS-232 G+ | Connect to Card Reader RS232+ |
| | GND | Grounding |
| | RS-232 H- | Connect to Card Reader RS232- |
| | RS-232 H+ | Connect to Card Reader RS232+ |
| Power Input | +24 V | 24 VDC Power Input |
| | GND | Grounding |
| Event Input | C1 | Event Alarm Input 4 |
| | GND | Grounding |
| | C2 | Fire Input |
| | C3 | Event Alarm Input 2 |
| | GND | Grounding |

| Access Control Board Terminal Description | | |
|---|---|---|
| | C4 | Event Alarm Input 1 |
| Exit Button | B2 | Door 2 Signal Input |
| | GND | Grounding |
| | B1 | Door 1 Signal Input |
| Door Lock (Relay) | D1- | Door 1 Relay Output (Dry Contact) |
| | D1+ | |
| | D2- | Door 2 Relay Output (Dry Contact) |
| | D2+ | |
| Alarm Output | NO/NC1 | Alarm Output Relay 1 (Dry Contact) |
| | COM1 | |
| | NO/NC2 | Alarm Output Relay 2 (Dry Contact) |
| | COM2 | |
| | NO/NC3 | Alarm Output Relay 3 (Dry Contact) |
| | COM3 | |
| | NO/NC4 | Alarm Output Relay 4 (Dry Contact) |
| | COM4 | |
| Network Interface | LAN | Network Accessing |

**Note**

- The alarm input hardware interface is normally open by default. So only the normally open signal is allowed. It can be linked to the buzzer of the card reader and access controller, and the alarm relay output and open door relay output.
- The DIP of RS-485 card ID is set as 1 and 4 by default. 1 is for entering, and 4 is for exiting. If the user has configured visitor card, you should connect two card readers on the exiting side. Set the DIP switch of one of the card reader as 4, and set the other one's as 3.
  Card Reader 3 should be used together with the card recycler.
  Normal users should present card on Card Reader 4, while visitors should present card on Card Reader 3.
- The Wiegand card reader 1 and 2 refer to the entering and exiting card reader respectively.
- The alarm output supports relay output.
- For any requirements, the door lock can control the door barrier status of the third party. D1 controls the barrier opening for entrance, while D2 controls the door opening for exit. For details, see ***Barrier Control Relay Output Mode*** .

- C3 and C4 in the event input can also be people counting interface. C3 controls people counting for entrance, while C4 controls people counting for exit. When the access control board detects signals in C3 and C4, the people number will be accumulated. For detailed information about people counting and people number, see *Configuring People Counting Parameters* in *User Manual of iVMS-4200 AC Client Software*.
- For detailed information about the DIP switch, see ***DIP Switch*** .

### 4.5.4 Access Control Board Serial Port ID Description

You can use the jumper cap on the access control board to switch the interface communication mode. For details about switching between RS-232 and RS-485 communication type, see *Switching RS-485/RS-232 Mode*.

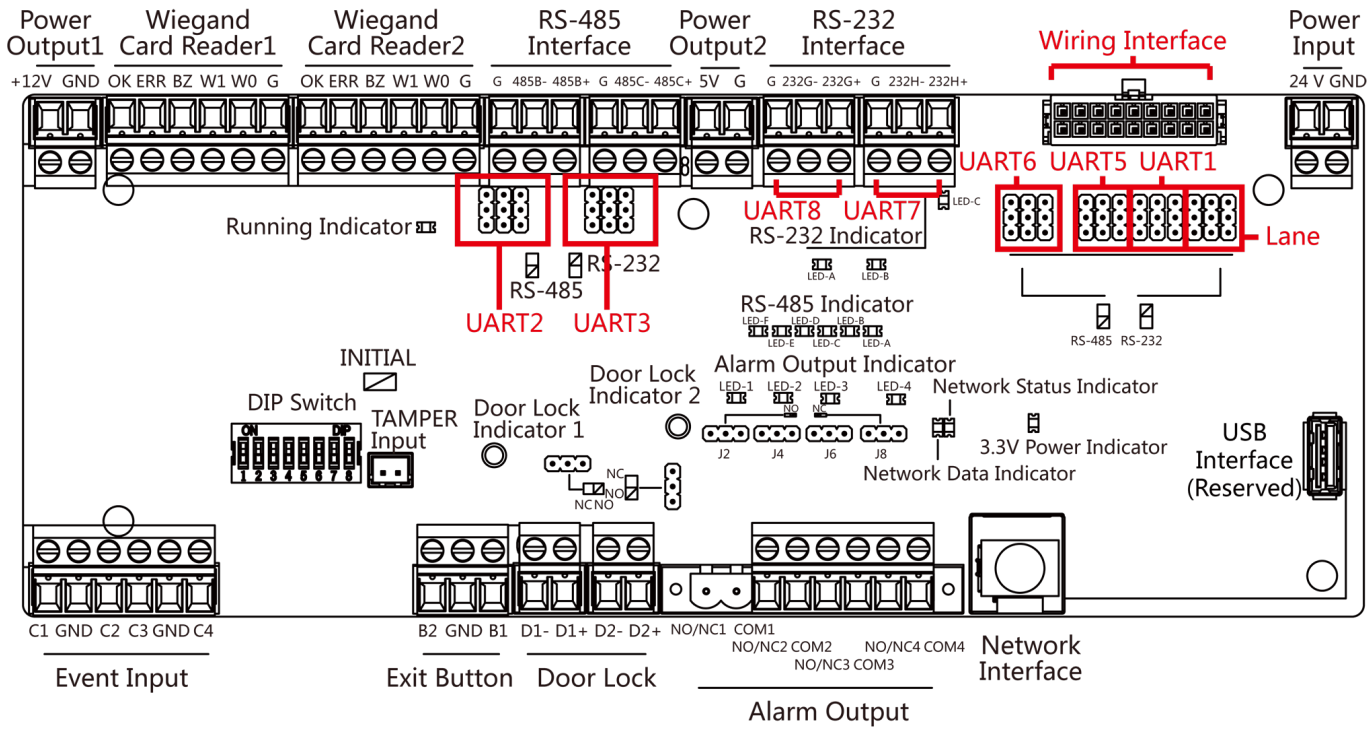


**Figure 4-9 Access Control Board**

According to the picture above, the RS-485 serial port corresponds to UART2 and UART3. RS-232 serial port is corresponded to UART7 and UART8. Wiring Interface is corresponded to UART1, UART4, UART6, UART6, and Lane.

The access control board descriptions are as follows:

**UART2/UART3 Jumper Cap**

Reserved serial port. Use the jumper cap to switch the serial port communication mode. You can switch between the RS-485 communication mode and the RS-232 communication mode. By default, it is in RS-485 communication mode.

**UART6 Jumper Cap**

Use the jumper cap to switch the serial port communication mode with the sub lane controller. You can switch between the RS-232 communication mode and the RS-485 communication mode. By default, it is in RS-232 communication mode.

**UART5 Jumper Cap**

Use the jumper cap to switch the serial port communication mode with the sub lane controller. You can switch between the RS-485 communication mode and the RS-232 communication mode. By default, it is in RS-485 communication mode.

**UART1 Jumper Cap**

Use the jumper cap to switch the serial port communication mode with the main lane controller. You can switch between the RS-485 communication mode and the RS-232 communication mode. By default, it is in RS-485 communication mode.

**Lane**

Use the jumper cap to switch the serial port communication mode with the lane controller. By default, the interface is wired and it is in RS-485 communication mode. If wiring other controllers **(compatible with Hikvision communication protocol)**, use the jumper cap to switch between RS-485 and RS-232 communication mode.

**UART4**

The serial port is in the wiring interface according to the picture above, which has a fixed RS-232 communication mode to communicate with the main lane controller. It contains no jumper cap and cannot change the communication mode.

**UART7/UART8**

Reserved serial port. The serial port has a fixed RS-232 communication mode. It contains no jumper cap and cannot change the communication mode. The RS-232 interface's QR code transmission database should no more than 64 bit.

The reserved interface positions in the turnstile and their corresponded UART No. are as follows:

**Note**

The diagram is for reference only.

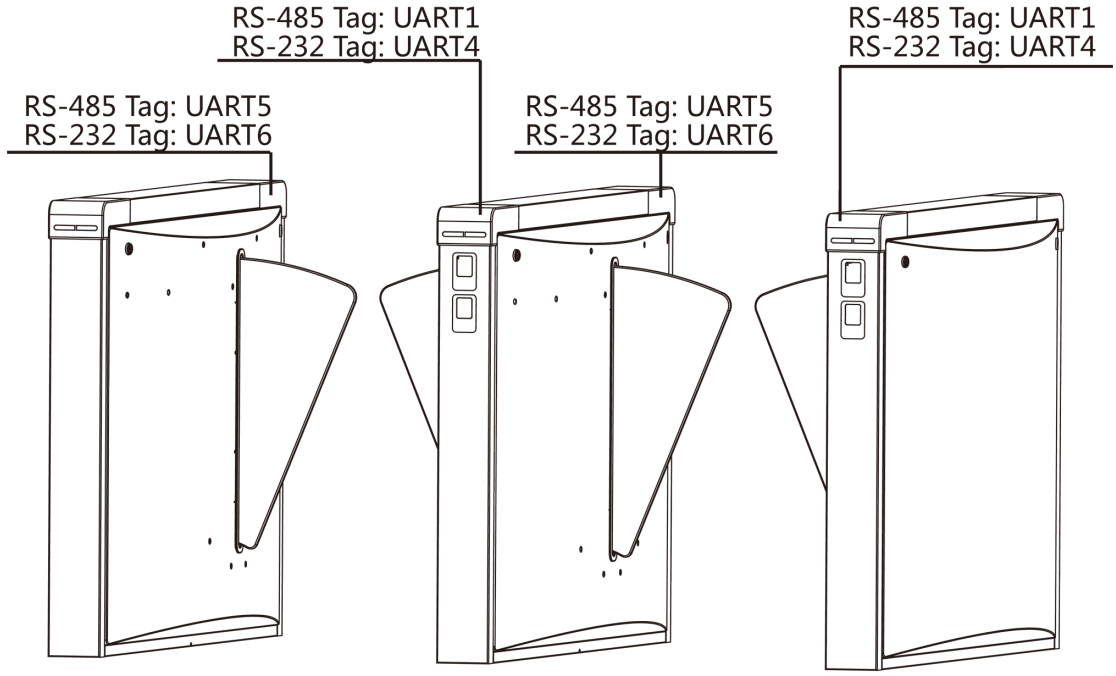


**Figure 4-10 Interface and Corresponded UART No.**

### 4.5.5 RS-485 Wiring

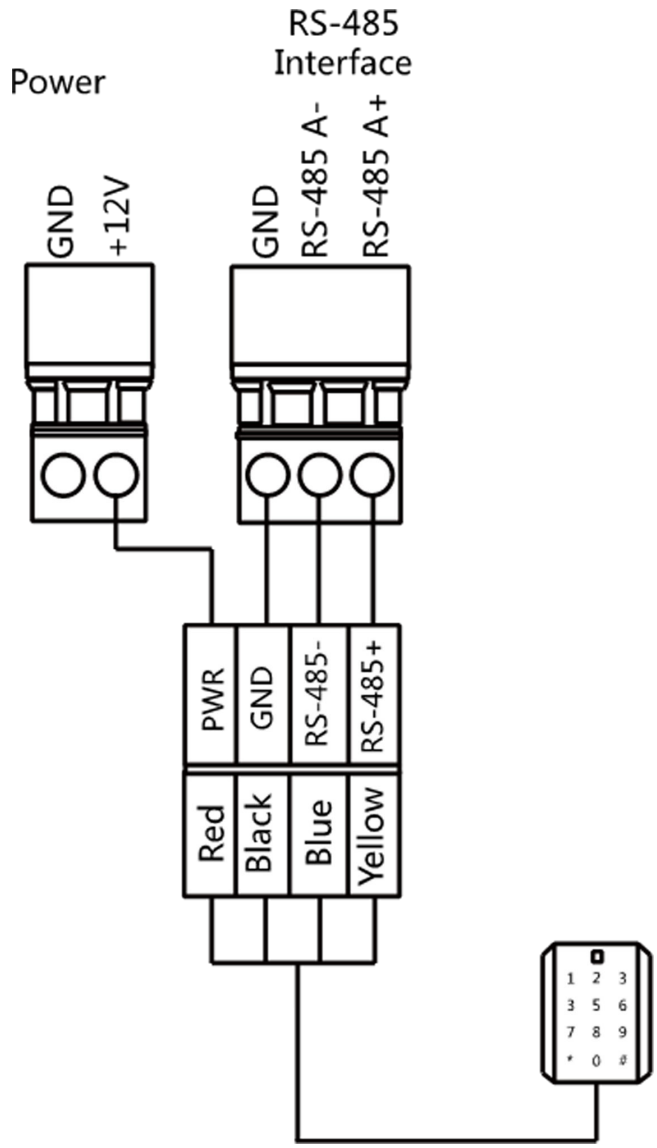


**Note**

- There are four RS-485 interfaces, which are for connecting ID card reader, IC card reader, QR code scanner, fingerprint and card reader, card recycler, fingerprint reader, and face recognition terminal. Take the wiring of RS-485 card reader as an example.
- When connecting the RS-485 interface with a card reader, the default entrance address is 1 and the exit address is 4.
- If there are more than 1 RS-485 devices connected, the RS-485 ID cannot be conflicted.

### 4.5.6 RS-232 Wiring

**Note**

There are three RS-232 interfaces (UART4, UART7, and UART8). UART7 and UART8 can connect QR code scanner, and card recycler, while UART4 can connect QR code scanner, card recycler, and face recognition terminal.

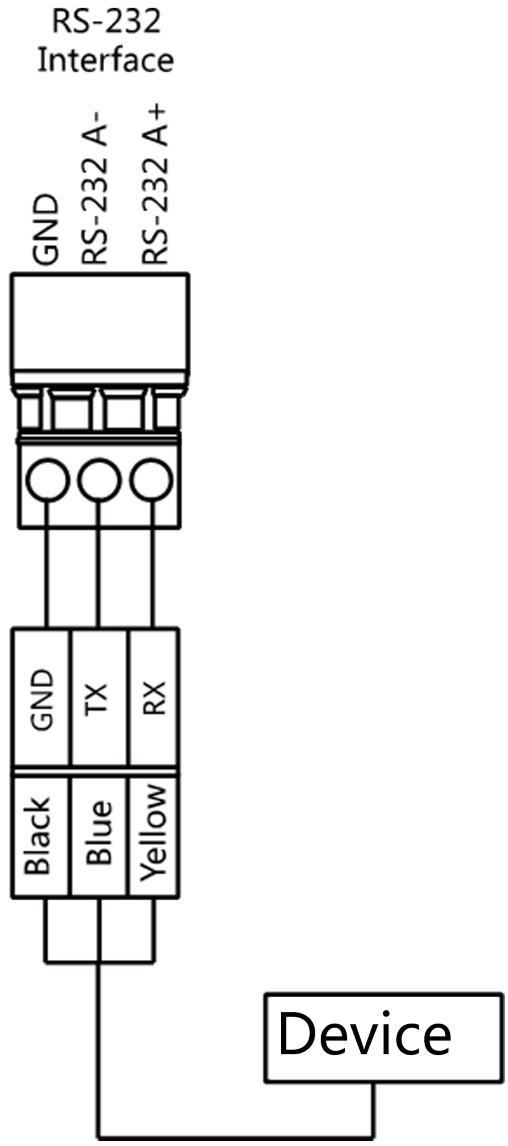

### 4.5.7 Wiegand Wiring

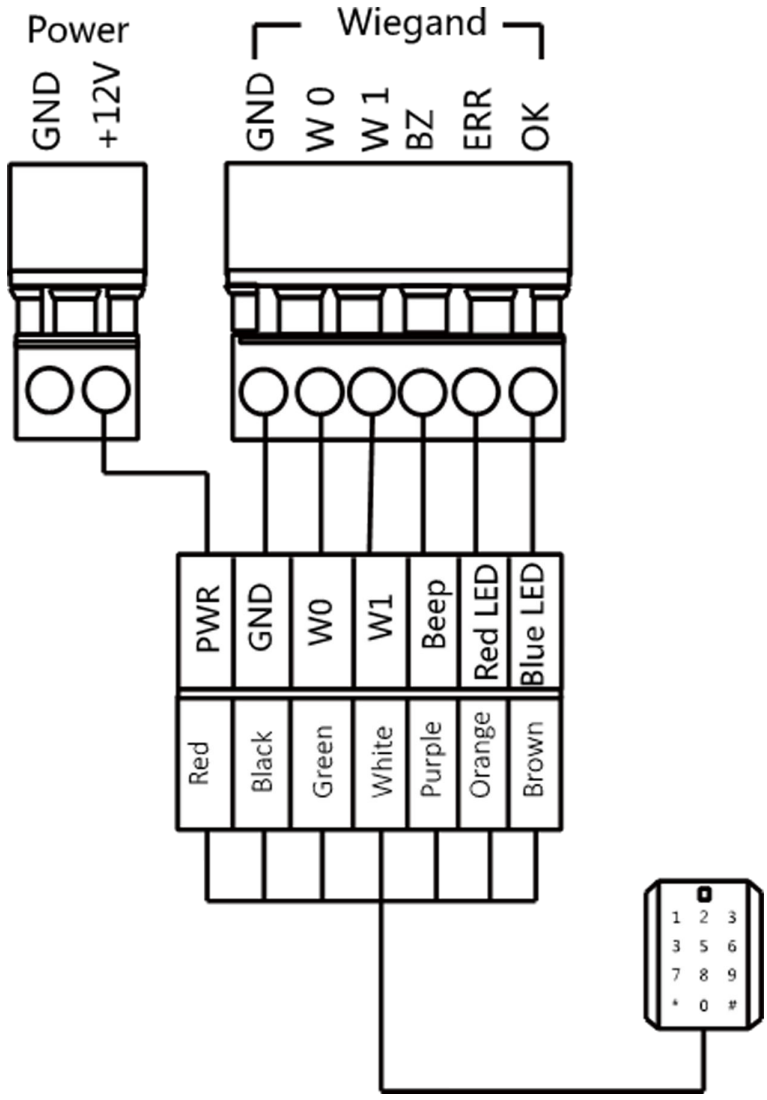


**Note**

Connect the OK/ERR/BZ if the access controller should control the LED and buzzer of the Wiegand card reader.

### 4.5.8 Barrier Control Wiring

By default, the barrier has connected with the access control board. The lane control board can control the barrier status. If possible, the device can connect with a third party lane control board

to control the third party barriers. Interface D1 controls barrier opening for entrance, while interface D2 controls barrier opening for exit.

**Note**

Use the jumper cap to switch the relay status. For details, see ***Barrier Control Relay Output Mode*** .

## Entering Wiring

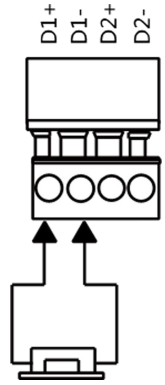


## Exiting Wiring

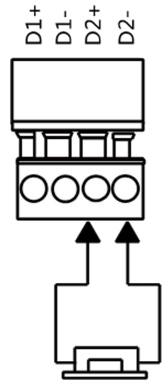

### 4.5.9 Alarm Output Wiring

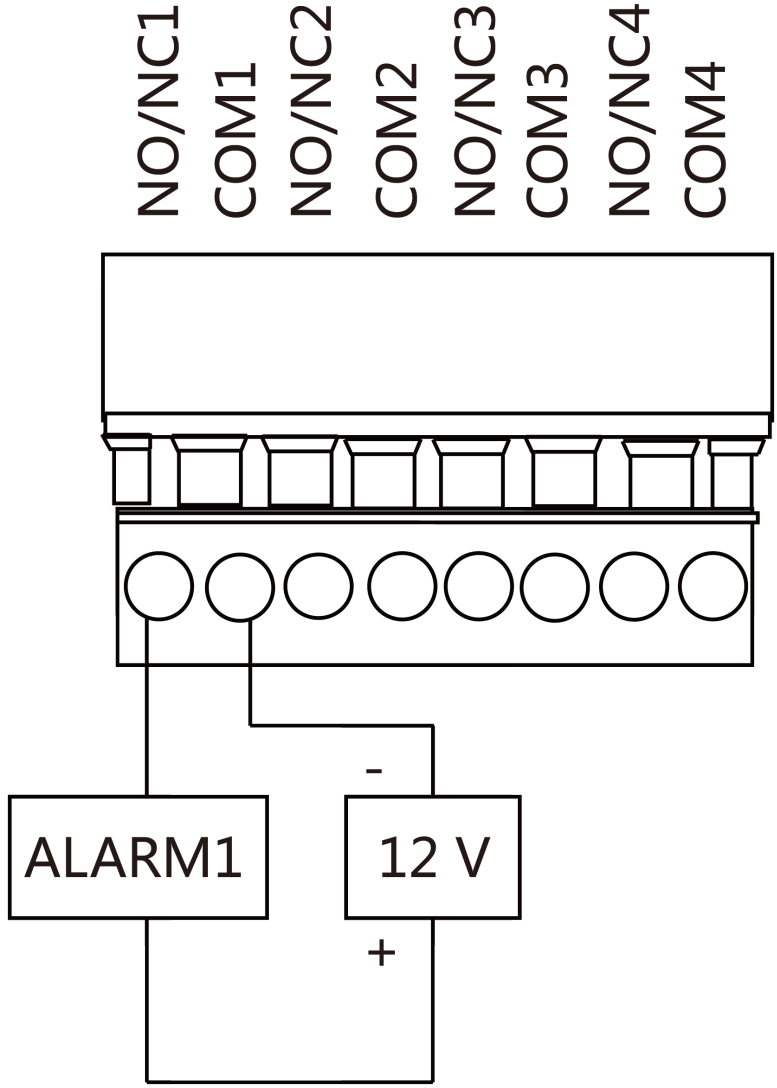


**Note**

For details about changing the relay output status via the jumper cap, see ***Alarm Relay Output Mode (NO/NC)*** .

### 4.5.10 Exit Button Wiring

You can view the exit button wiring diagram.

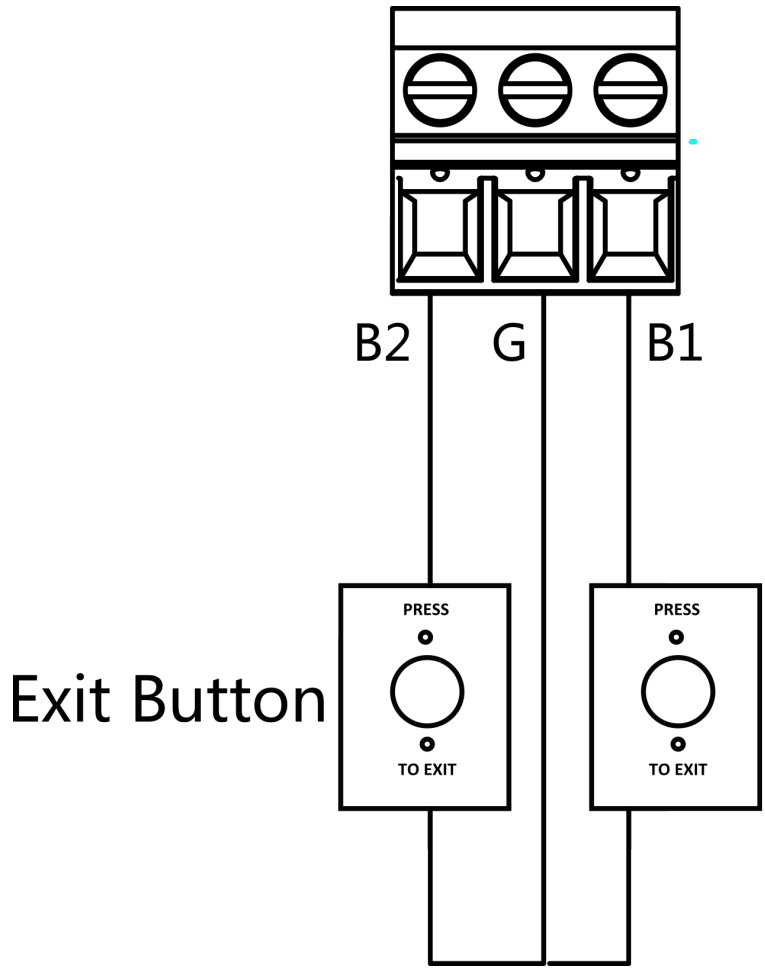


**Figure 4-11 Exit Button Wiring**

# Chapter 5 Device Settings

After installation and wiring completed, the turnstile will learn the open and closed position automatically.

After the learning, the turnstile is in the normal mode. You can also set the turnstile to test mode, passing mode and memory mode, pair the keyfob, initialize the hardware, switching between RS-485 communication mode and RS-232 communication mode, and view relay output NO/NC diagram by setting the DIP switch on the access control board.

- Normal Mode: The device will work properly.
- Test Mode: Test mode is the same as the normal mode except that the device cannot report the alarm, the event, or the people counting information to the center.
- Passing Mode: There are 9 passing modes, including controlled bi-direction, controlled entrance and prohibited exit, controlled entrance and free exit, free bi-direction, free entrance and controlled exit, free entrance and prohibited exit, prohibited bi-direction, prohibited entrance and free exit.
- Memory Mode: By default, the memory mode is enabled. When multiple cards are presented and authenticated, it allows multiple persons passing through the lane. When it counts the passing people number is equal to the card presented times, or no person passing through the lane after the last person passing, the barriers will be closed.

**Note**

You can also set the DIP switch on the access control board to control the entrance and exit controlling type, keyfob pairing, etc. For details about the DIP switch value, see ***DIP Switch*** .

## 5.1 Pair Keyfob (Optional)

Pair the remote control to the device through DIP switch to open/close the barrier remotely.

**Before You Start**

Ask our technique supports or sales and purchase the keyfob.

**Steps**

**Note**

Up to 32 keyfobs can be added to the turnstile.

1. Power off the turnstile.
2. Set the No.4 switch of the DIP Switch on the access control board to the ON side.

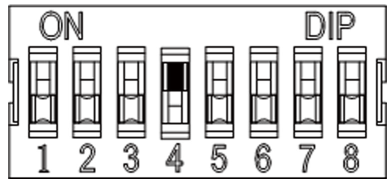


3. Power on the turnstile and it will enter the keyfob pairing mode.
4. Hold the **Close** button for more than 10 seconds. Or pair turnstile and keyfob in the client software, see *Manage Keyfob User* of the user manual for more details.

   The keyfob's indicator of the will flash twice if the pairing is completed.
5. Set the No.4 switch to OFF, and reboot the turnstile to take effect.

**Note**

- Only one turnstile can pair the keyfob. If multiple turnstiles are in the pairing mode, the keyfob will select only one of them to pair.
- For details about DIP switch value and meaning, see ***DIP Switch*** .

6. **Optional:** Go to **System → User → Keyfob User** on the remote control page of the client software to delete the keyfob.

## 5.2 Initialize Device

**Steps**

1. Remove the JP11 jumper cap on the access control board.

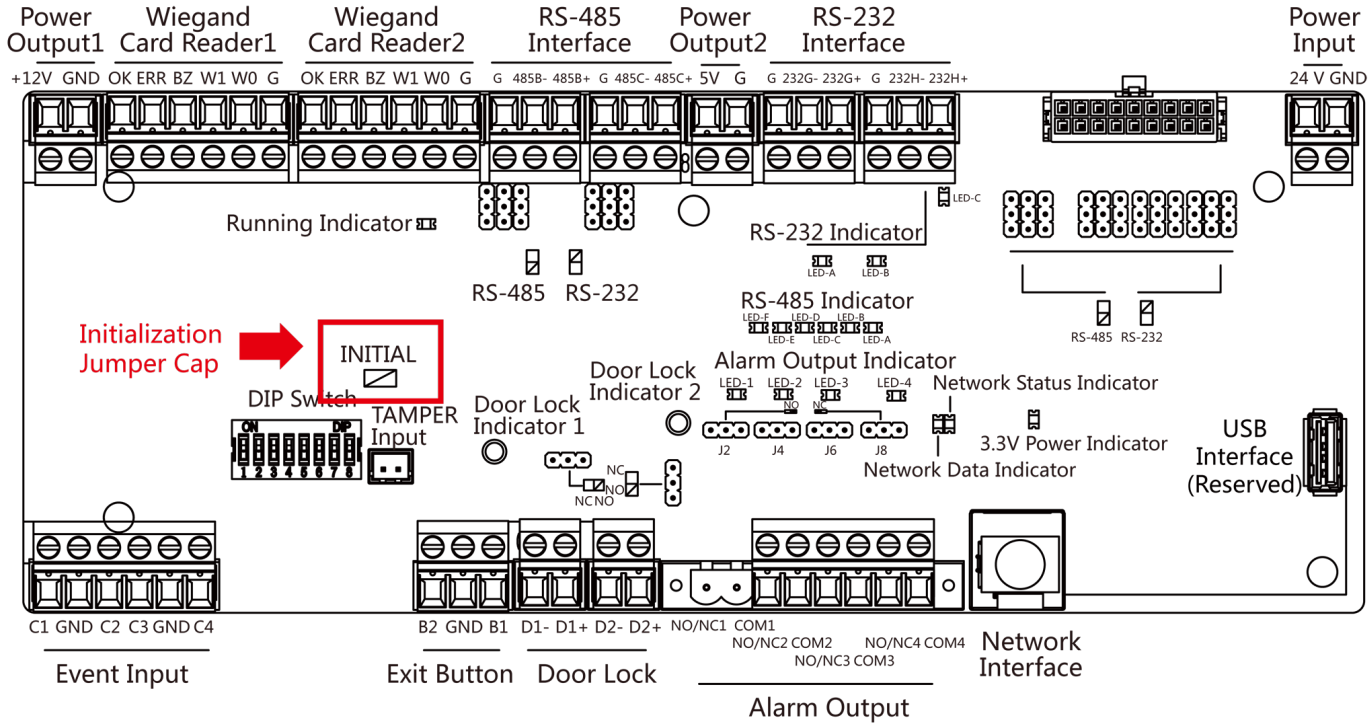


**Figure 5-1 Initialization Jumper Cap**

2. Disconnect the power and reboot the device. The device buzzer buzzes a long beep.
3. When the beep stopped, plug the jumper cap back.
4. Disconnect the power and power on the device again.

**Caution**

The initialization of the device will restore all the parameters to the default setting and all the device events are deleted.

**Note**

Make sure no persons are in the lane when powering on the device.

## 5.3 Switch to RS-485/RS-232 Mode

Take the Serial Port 4 and on the access control board as an example. If the Jumper cap's position is like the picture displayed below. (The black part is the jumper cap.) The serial port is in RS-485 communication mode.

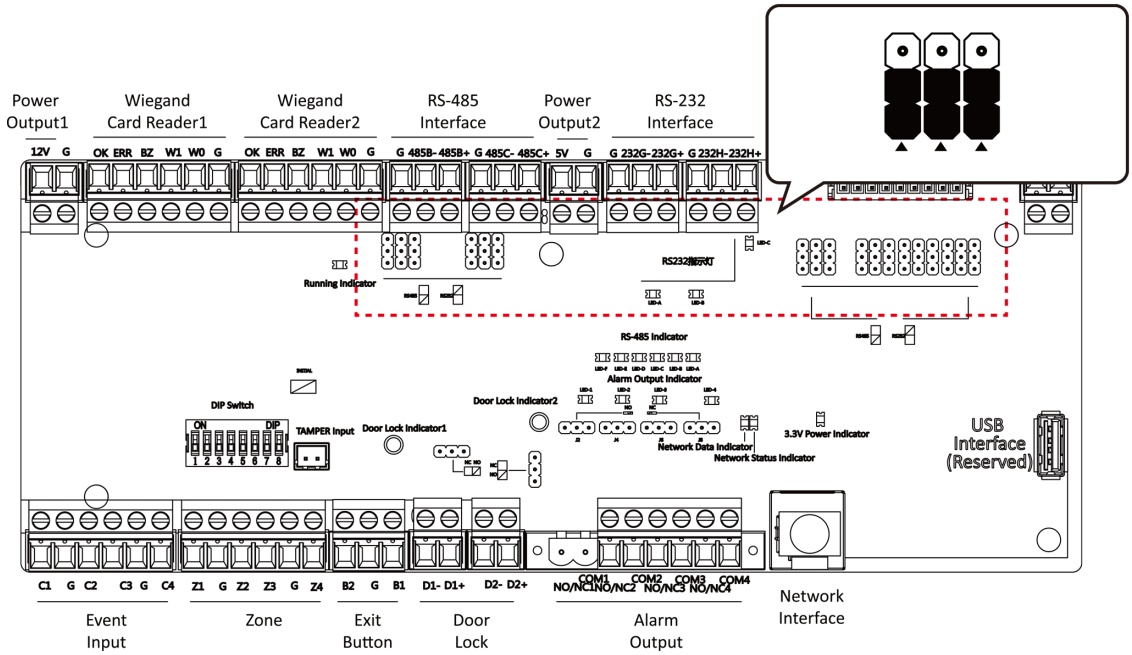


**Figure 5-2 Jumper Cap Status of RS-485 Interface**

If the Jumper cap's position is like the picture displayed below. (The black part is the jumper cap.) The serial port is in RS-232 communication mode.

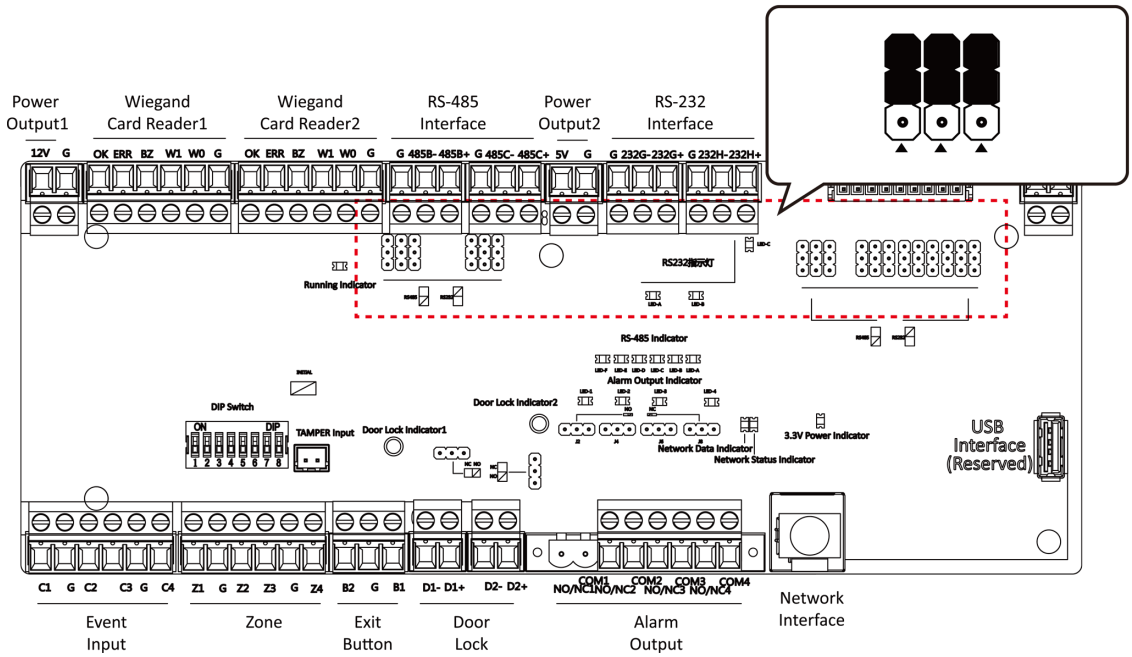


**Figure 5-3 Jumper Cap Status of RS-232 Interface**

## 5.4 Switch Relay Output Mode (NO/NC)

### 5.4.1 Barrier Control Relay Output Mode

The pins of the barrier control relay on the access control board is as below:

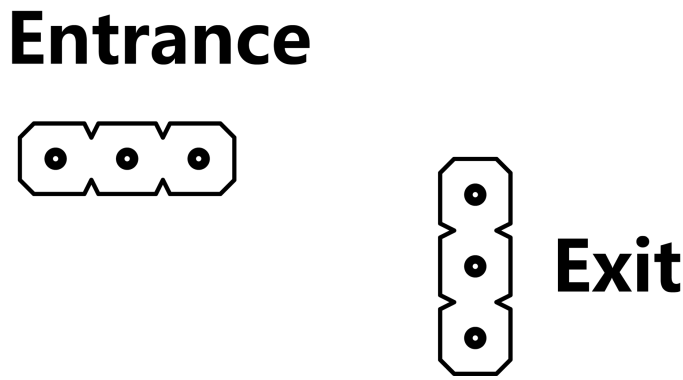


**Figure 5-4 Pin Appearance**

The jumper cap's position of barrier opening for entrance (NO) is as below:

The jumper cap's position of barrier opening for exit (NO) is as below:

The jumper cap's position of barrier closing for entrance (NC) is as below:

The jumper cap's position of barrier closing for exit (NC) is as below:

### 5.4.2 Alarm Relay Output Mode (NO/NC)

Alarm Relay Output Mode (NO):

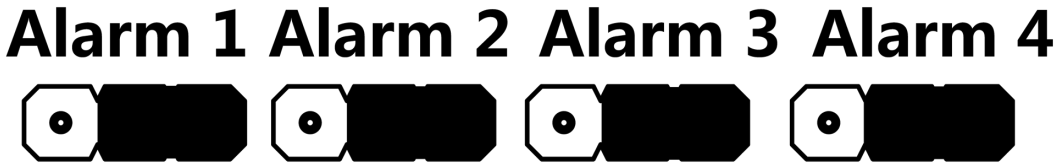


Alarm Relay Output Mode (NC):

# Chapter 6 Activation

You should activate the device before the first login. After powering on the device, the system will switch to Device Activation page.

Activation via the device, SADP tool and the client software are supported.

The default values of the device are as follows:

- The default IP address: 192.0.0.64
- The default port No.: 8000
- The default user name: admin

## 6.1 Activate via SADP

SADP is a tool to detect, activate and modify the IP address of the device over the LAN.

**Before You Start**

- Get the SADP software from the supplied disk or the official website ***http://www.hikvision.com/en/*** , and install the SADP according to the prompts.
- The device and the PC that runs the SADP tool should be within the same subnet.

The following steps show how to activate a device and modify its IP address. For batch activation and IP addresses modification, refer to *User Manual of SADP* for details.

**Steps**

1. Run the SADP software and search the online devices.
2. Find and select your device in online device list.
3. Input new password (admin password) and confirm the password.

   **Caution**

   STRONG PASSWORD RECOMMENDED-We highly recommend you create a strong password of your own choosing (using a minimum of 8 characters, including upper case letters, lower case letters, numbers, and special characters) in order to increase the security of your product. And we recommend you reset your password regularly, especially in the high security system, resetting the password monthly or weekly can better protect your product.
4. Click **Activate** to start activation.

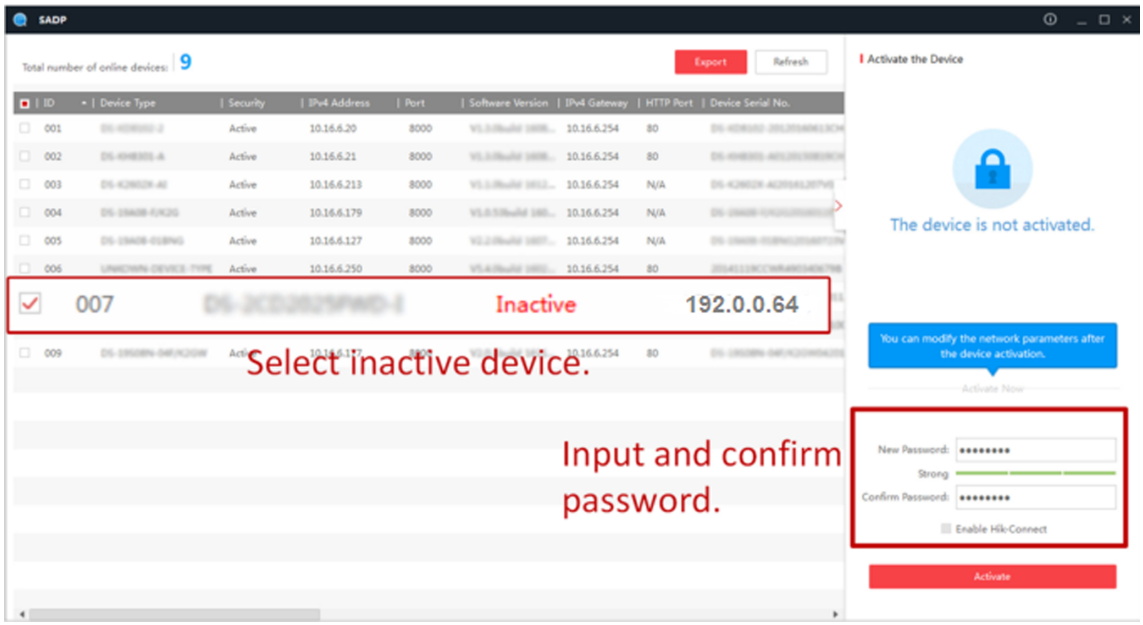


Status of the device becomes **Active** after successful activation.

5. Modify IP address of the device.
   1) Select the device.
   2) Change the device IP address to the same subnet as your computer by either modifying the IP address manually or checking **Enable DHCP**.
   3) Input the admin password and click **Modify** to activate your IP address modification.

## 6.2 Activate Device via Client Software

For some devices, you are required to create the password to activate them before they can be added to the software and work properly.

**Steps**

**Note**

This function should be supported by the device.

1. Enter the Device Management page.
2. Click on the right of **Device Management** and select **Device**.
3. Click **Online Device** to show the online device area.

   The searched online devices are displayed in the list.
4. Check the device status (shown on **Security Level** column) and select an inactive device.
5. Click **Activate** to open the Activation dialog.
6. Create a password in the password field, and confirm the password.

**Caution**

The password strength of the device can be automatically checked. We highly recommend you change the password of your own choosing (using a minimum of 8 characters, including at least three kinds of following categories: upper case letters, lower case letters, numbers, and special characters) in order to increase the security of your product. And we recommend you change your password regularly, especially in the high security system, changing the password monthly or weekly can better protect your product.

Proper configuration of all passwords and other security settings is the responsibility of the installer and/or end-user.

7. Click **OK** to activate the device.

# Chapter 7 Client Software Configuration

## 7.1 Configuration Flow of Client Software

Follow the flow diagram below to configure on the client software.

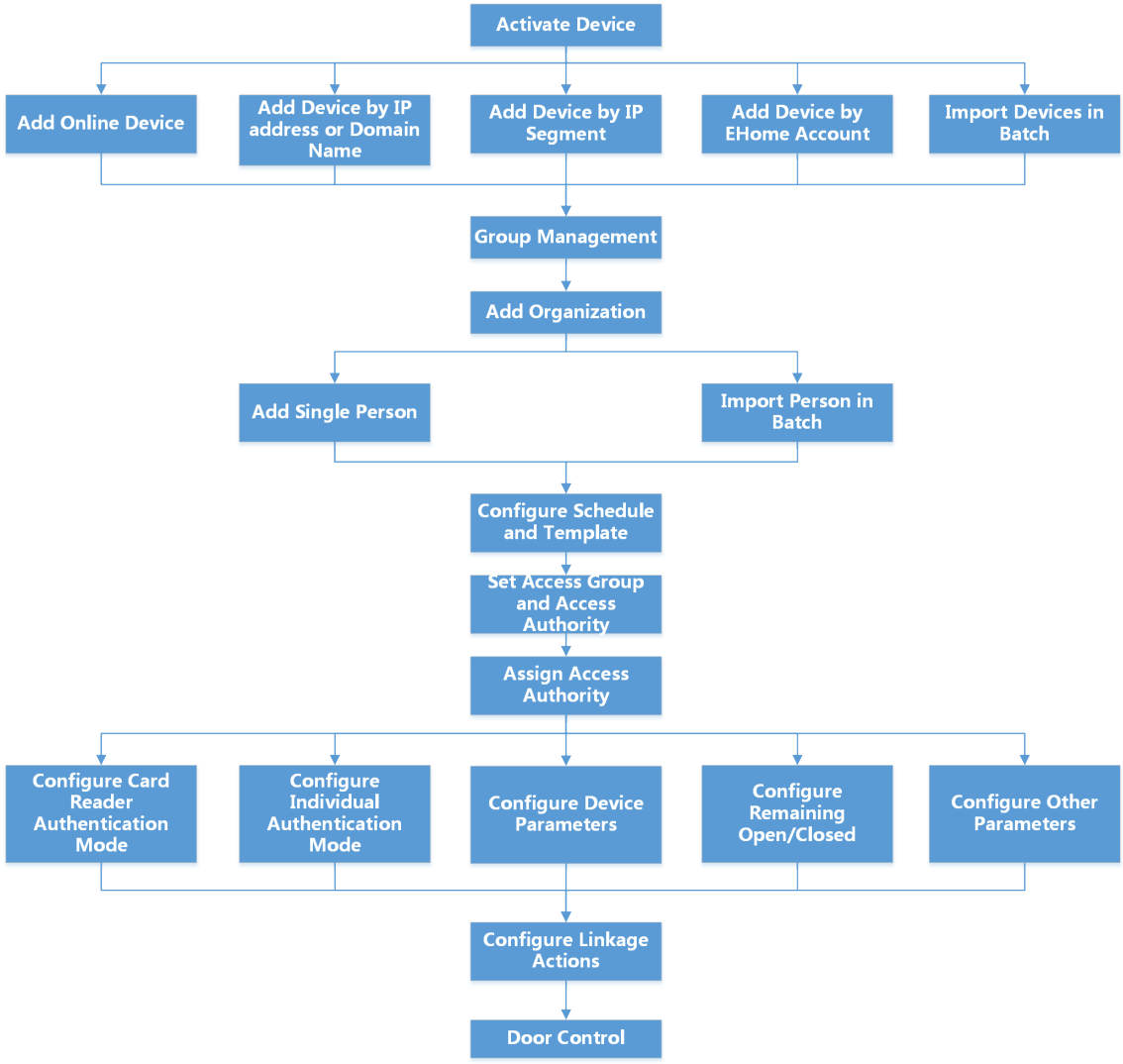


**Figure 7-1 Flow Diagram of Configuration on Client Software**

## 7.2 Device Management

The client supports managing access control devices and video intercom devices.

**Example**
You can control entrance & exit and manage attendance after adding access control devices to the client; you can perform video intercom with the indoor stations and door stations.

## 7.2.1 Add Device

The client provides three device adding modes including by IP/domain, IP segment, and ISUP protocol. The client also supports importing multiple devices in a batch when there are large amount of devices to be added.

### Add Online Device

The active online devices in the same local subnet with the client software will be displayed on the **Online Device** area. You can click **Refresh Every 60s** to refresh the information of the online devices.

### Add a Detected Online Device

You can select a detected online device displayed in the online device list and add it to the client.

**Steps**
1. Enter the Device Management module.
2. Click **Device** tab on the top of the right panel.
3. Click **Online Device** to show the online device area.
   The searched online devices are displayed in the list.
4. Select an online device in the **Online Device** area, and click **Add** to open the device adding window.

   **Note**
   For the inactive device, you need to create the password for it before you can add the device properly. For detailed steps, refer to .
5. Enter the required information.
   **Name**
   Enter a descriptive name for the device.
   **IP Address**
   Enter the device's IP address. The IP address of the device is obtained automatically in this adding mode.
   **Port**
   You can customize the port number. The port number of the device is obtained automatically in this adding mode.

**User Name**

By default, the user name is ***admin***.

**Password**

Enter the device password.

**Caution**

The password strength of the device can be automatically checked. We highly recommend you change the password of your own choosing (using a minimum of 8 characters, including at least three kinds of following categories: upper case letters, lower case letters, numbers, and special characters) in order to increase the security of your product. And we recommend you change your password regularly, especially in the high security system, changing the password monthly or weekly can better protect your product.
Proper configuration of all passwords and other security settings is the responsibility of the installer and/or end-user.

6. **Optional:** Check **Transmission Encryption (TLS)** to enable transmission encryption using TLS (Transport Layer Security) protocol for security purpose.

**Note**

- This function should be supported by the device.
- If you have enabled Certificate Verification, you should click **Open Certificate Directory** to open the default folder, and copy the certificate file exported from the device to this default directory to strengthen the security. See for details about enabling certificate verification.
- You can log into the device to get the certificate file by web browser.

7. Check **Synchronize Time** to synchronize the device time with the PC running the client after adding the device to the client.
8. **Optional:** Check **Import to Group** to create a group by the device name, and import all the channels of the device to this group.

   **Example**

   For access control device, its access points, alarm inputs/outputs, and encoding channels (if exist) will be imported to this group.
9. Click **Add**.

## Add Multiple Detected Online Devices

For detected online devices sharing the same user name and password, you can add them to the client in a batch.

**Before You Start**

Make sure the to-be-added devices are online.

**Steps**

1. Enter the Device Management module.

2. Click **Device** tab on the top of the right panel.
3. Click **Online Device** to show the online device area at the bottom of the page.

   The searched online devices are displayed in the list.
4. Select multiple devices.

   **Note**

   For the inactive device, you need to create the password for it before you can add the device properly. For details, refer to .
5. Click **Add** to open the device adding window.
6. Enter the required information.

   **User Name**

   By default, the user name is ***admin***.

   **Password**

   Enter the device password.

   **Caution**

   The password strength of the device can be automatically checked. We highly recommend you change the password of your own choosing (using a minimum of 8 characters, including at least three kinds of following categories: upper case letters, lower case letters, numbers, and special characters) in order to increase the security of your product. And we recommend you change your password regularly, especially in the high security system, changing the password monthly or weekly can better protect your product.
   Proper configuration of all passwords and other security settings is the responsibility of the installer and/or end-user.
7. **Optional:** Check **Synchronize Time** to synchronize the device time with the PC running the client after adding the device to the client.
8. **Optional:** Check **Import to Group** to create a group by the device name, and import all the channels of the device to this group.

   **Example**

   For access control device, its access points, alarm inputs/outputs, and encoding channels (if exist) will be imported to this group.
9. Click **Add** to add the devices.

## Add Device by IP Address or Domain Name

If you know the IP address or domain name of the device to add, you can add devices to the client by specifying the IP address (or domain name), user name, password, etc.

**Steps**

1. Enter Device Management module.
2. Click **Device** tab on the top of the right panel.

The added devices are displayed on the right panel.

3. Click **Add** to open the Add window, and then select **IP/Domain** as the adding mode.
4. Enter the required information.

**Name**

Create a descriptive name for the device. For example, you can use a nickname that can show the location or feature of the device.

**Address**

The IP address or domain name of the device.

**Port**

The devices to add share the same port number. The default value is ***8000***.

**User Name**

Enter the device user name. By default, the user name is ***admin***.

**Password**

Enter the device password.

**Caution**

The password strength of the device can be automatically checked. We highly recommend you change the password of your own choosing (using a minimum of 8 characters, including at least three kinds of following categories: upper case letters, lower case letters, numbers, and special characters) in order to increase the security of your product. And we recommend you change your password regularly, especially in the high security system, changing the password monthly or weekly can better protect your product.
Proper configuration of all passwords and other security settings is the responsibility of the installer and/or end-user.

5. **Optional:** Check **Transmission Encryption (TLS)** to enable transmission encryption using TLS (Transport Layer Security) protocol for security purpose.

**Note**

- This function should be supported by the device.
- If you have enabled Certificate Verification, you should click **Open Certificate Directory** to open the default folder, and copy the certificate file exported from the device to this default directory to strengthen the security. See for details about enabling certificate verification.
- You can log into the device to get the certificate file by web browser.

6. Check **Synchronize Time** to synchronize the device time with the PC running the client after adding the device to the client.
7. **Optional:** Check **Import to Group** to create a group by the device name, and import all the channels of the device to this group.

**Example**

For access control device, its access points, alarm inputs/outputs, and encoding channels (if exist) will be imported to this group.

8. Finish adding the device.
   - Click **Add** to add the device and back to the device list page.
   - Click **Add and New** to save the settings and continue to add other device.

## Add Devices by IP Segment

If the devices share the same port No., user name and password, and their IP addresses ranges in the same IP segment, you can add them to the client by specifying the start IP address and the end IP address, port No., user name, password, etc of the devices.

**Steps**

1. Enter the Device Management module.
2. Click **Device** tab on the top of the right panel.

   The added devices are displayed on the right panel.
3. Click **Add** to open the Add window.
4. Select **IP Segment** as the adding mode.
5. Enter the required information.

   **Start IP**

   Enter a start IP address.

   **End IP**

   Enter an end IP address in the same network segment with the start IP.

   **Port**

   Enter the device port No. The default value is ***8000***.

   **User Name**

   By default, the user name is ***admin***.

   **Password**

   Enter the device password.

   **Caution**

   The password strength of the device can be automatically checked. We highly recommend you change the password of your own choosing (using a minimum of 8 characters, including at least three kinds of following categories: upper case letters, lower case letters, numbers, and special characters) in order to increase the security of your product. And we recommend you change your password regularly, especially in the high security system, changing the password monthly or weekly can better protect your product.
   Proper configuration of all passwords and other security settings is the responsibility of the installer and/or end-user.
6. **Optional:** Check **Transmission Encryption (TLS)** to enable transmission encryption using TLS (Transport Layer Security) protocol for security purpose .

**Note**

- This function should be supported by the device.
- If you have enabled Certificate Verification, you should click **Open Certificate Folder** to open the default folder, and copy the certificate file exported from the device to this default directory to strengthen the security. See for details about enabling certificate verification.
- You can log into the device to get the certificate file by web browser.

7. Check **Synchronize Time** to synchronize the device time with the PC running the client after adding the device to the client.
8. **Optional:** Check **Import to Group** to create a group by the device name, and import all the channels of the device to the group.
9. Finish adding the device.
   - Click **Add** to add the device and back to the device list page.
   - Click **Add and New** to save the settings and continue to add other device.

## Import Devices in a Batch

You can add multiple devices to the client in a batch by entering the device parameters in a pre-defined CSV file.

**Steps**

1. Enter the Device Management module.
2. Click **Device** tab on the top of the right panel.
3. Click **Add** to open the Add window, and then select **Batch Import** as the adding mode.
4. Click **Export Template** and then save the pre-defined template (CSV file) on your PC.
5. Open the exported template file and enter the required information of the devices to be added on the corresponding column.

**Note**

For detailed description of the required fields, refer to the introductions in the template.

**Adding Mode**

Enter ***0*** or ***1*** or ***2***.

**Address**

Edit the address of the device.

**Port**

Enter the device port number. The default port number is ***8000***.

**User Name**

Enter the device user name. By default, the user name is ***admin***.

**Password**

Enter the device password.

**Caution**

The password strength of the device can be automatically checked. We highly recommend you change the password of your own choosing (using a minimum of 8 characters, including at least three kinds of following categories: upper case letters, lower case letters, numbers, and special characters) in order to increase the security of your product. And we recommend you change your password regularly, especially in the high security system, changing the password monthly or weekly can better protect your product.
Proper configuration of all passwords and other security settings is the responsibility of the installer and/or end-user.

**Import to Group**

Enter ***1*** to create a group by the device name. All the channels of the device will be imported to the corresponding group by default. Enter ***0*** to disable this function.

6. Click ··· and select the template file.
7. Click **Add** to import the devices.

### 7.2.2 Reset Device Password

If you forgot the password of the detected online devices, you can reset the device password via the client.

**Steps**

1. Enter Device Management page.
2. Click **Online Device** to show the online device area.

   All the online devices sharing the same subnet will be displayed in the list.
3. Select the device from the list and click on the Operation column.
4. Reset the device password.
   - Click **Generate** to pop up the QR Code window and click **Download** to save the QR code to your PC. You can also take a photo of the QR code to save it to your phone. Send the picture to our technical support.

**Note**

For the following operations for resetting the password, contact our technical support.

**Caution**

The password strength of the device can be automatically checked. We highly recommend you change the password of your own choosing (using a minimum of 8 characters, including at least three kinds of following categories: upper case letters, lower case letters, numbers, and special characters) in order to increase the security of your product. And we recommend you change your password regularly, especially in the high security system, changing the password monthly or weekly can better protect your product.

Proper configuration of all passwords and other security settings is the responsibility of the installer and/or end-user.

## 7.3 Group Management

The client provides groups to manage the added resources in different groups. You can group the resources into different groups according to the resources' locations.

**Example**
For example, on the 1st floor, there mounted 16 doors, 64 alarm inputs, and 16 alarm outputs. You can organize these resources into one group (named 1st Floor) for convenient management. You can control door status, and do some other operations of the devices after managing the resources by groups.

### 7.3.1 Add Group

You can add group to organize the added device for convenient management.

**Steps**
1. Enter the Device Management module.
2. Click **Device Management → Group** to enter the group management page.
3. Create a group.
   - Click **Add Group** and enter a group name as you want.
   - Click **Create Group by Device Name** and select an added device to create a new group by the name of the selected device.

   **Note**
   The resources (such as alarm inputs/outputs, access points, etc.) of this device will be imported to the group by default.

### 7.3.2 Import Resources to Group

You can import the device resources (such as alarm inputs/outputs, access points, etc.) to the added group in a batch.

**Before You Start**
Add a group for managing devices. Refer to ***Add Group*** .

**Steps**
1. Enter the Device Management module.
2. Click **Device Management → Group** to enter the group management page.
3. Select a group from the group list and select the resource type as **Access Point**, **Alarm Input**, **Alarm Output**, etc.

4. Click **Import**.
5. Select the thumbnails/names of the resources in the thumbnail/list view.

**Note**

You can click or to switch the resource display mode to thumbnail view or to list view.

6. Click **Import** to import the selected resources to the group.

### 7.3.3 Edit Resource Parameters

After importing the resources to the group, you can edit the resource parameters. For access point, you can edit the access point name. For alarm input, you can edit the alarm input name. Here we take access point as an example.

**Before You Start**

Import the resources to group.

**Steps**

1. Enter the Device Management module.
2. Click **Device Management → Group** to enter the group management page.
   All the added groups are displayed on the left.
3. Select a group on the group list and click **Access Point**.
   The access points imported to the group will display.
4. Click in the Operation column to open the Edit Resource window.
5. Edit the resource name.
6. Click **OK** to save the new settings.

### 7.3.4 Remove Resources from Group

You can remove the added resources from the group.

**Steps**

1. Enter the Device Management module.
2. Click **Device Management → Group** to enter the group management page.
   All the added groups are displayed on the left.
3. Click a group to show the resources added to this group.
4. Select the resource(s) and click **Delete** to remove the resource(s) from the group.

## 7.4 Person Management

You can add person information to the system for further operations such as access control, video intercom, time and attendance, etc. You can manage the added persons such as issuing cards to them in a batch, importing and exporting person information in a batch, etc.

### 7.4.1 Add Organization

You can add an organization and import person information to the organization for effective management of the persons. You can also add a surbodinate organization for the added one.

**Steps**

1. Enter **Person** module.
2. Select a parent organization in the left column and click **Add** in the upper-left corner to add an organization.
3. Create a name for the added organization.

   **Note**

   Up to 10 levels of organizations can be added.
4. **Optional:** Perform the following operation(s).

| | |
|---|---|
| **Edit Organization** | Hover the mouse on an added organization and click to edit its name. |
| **Delete Organization** | Hover the mouse on an added organization and click to delete it.<br>**Note**<br>• The lower-level organizations will be deleted as well if you delete an organization.<br>• Make sure there is no person added under the organization, or the organization cannot be deleted. |
| **Show Persons in Sub Organization** | Check **Show Persons in Sub Organization** and select an organization to show persons in its sub organizations. |

### 7.4.2 Configure Basic Information

You can add person to the client one by one and configure the person's basic information such as name, email, phone number, etc.

**Steps**

1. Enter **Person** module.
2. Select an organization in the organization list to add the person.
3. Click **Add** to open the adding person window.

   The Person ID will be generated automatically.
4. Enter the basic information including person name, telephone number, email address, validity period, etc.
5. Confirm to add the person.
   - Click **Add** to add the person and close the Add Person window.
   - Click **Add and New** to add the person and continue to add other persons.

### 7.4.3 Issue a Card by Local Mode

If a card enrollment station is available, you can issue a card by local mode. To read the card number, you should connect the card enrollment station to the PC running the client by USB interface or COM, and place the card on the card enrollment station.

**Steps**

1. Enter **Person** module.
2. Select an organization in the organization list to add the person and click **Add** to enter Add Person panel.

   **Note**

   Enter the person's basic information first. For details about configuring person's basic information, refer to ***Configure Basic Information*** .

3. In the **Credential → Card** area, click **+**.
4. Click **Settings** to enter the Settings page.
5. Select **Local** as the card issuing mode.

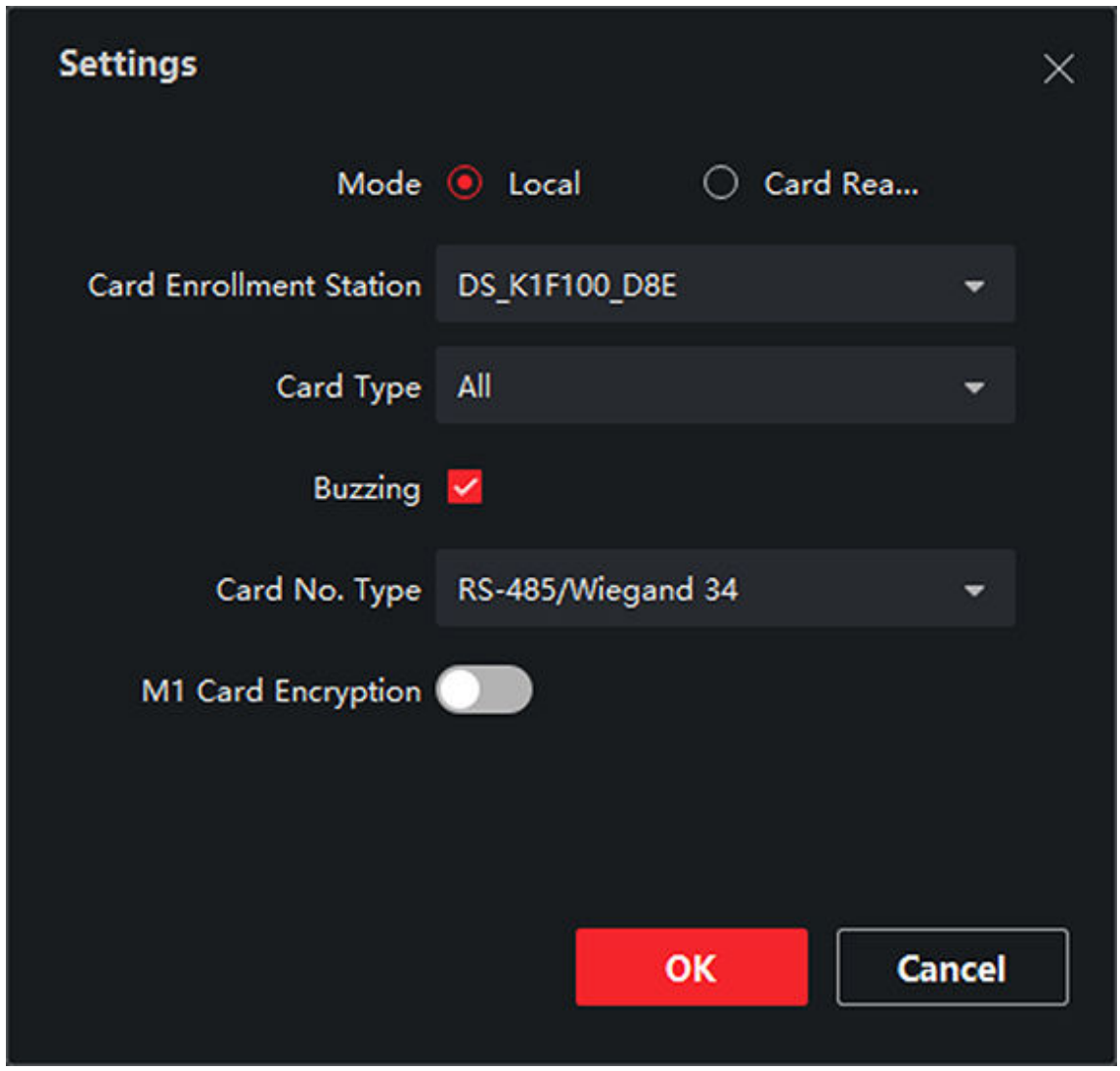


**Figure 7-2 Issue a Card by Local Mode**

**6.** Set other related parameters.

**Card Enrollment Station**

Select the model of the connected card enrollment station.

**Note**

Currently, the supported card enrollment station models include DS-K1F100-D8, DS-K1F100-M, DS-K1F100-D8E, and DS-K1F180-D8E.

**Card Type**

This field is only available when the model is DS-K1F100-D8E or DS-K1F180-D8E. Select the card type as EM card or M1 card according to the actual card type.

**Buzzing**

Enable or disable the buzzing when the card number is read successfully.

**Card No. Type**

Select the type of the card number according to actual needs.

**M1 Card Encryption**

This field is only available when the model is DS-K1F100-D8, DS-K1F100-D8E, or DS-K1F180-D8E. If the card is M1 card, then you can enable the M1 Card Encryption function and select the sector of the card to encrypt.

7. Click **OK** to confirm the operation.
8. Place the card on the card enrollment station, and click **Read** to get the card number.

   The card number will display in the Card No. field automatically.
9. Click **Add**.

   The card will be issued to the person.

### 7.4.4 Upload a Face Photo from Local PC

When adding person, you can upload a face photo stored in local PC to the client as the person's profile.

**Steps**

1. Enter **Person** module.
2. Select an organization in the organization list to add the person and click **Add**.

   **Note**

   Enter the person's basic information first. For details about configuring person's basic information, refer to ***Configure Basic Information*** .
3. Click **Add Face** in the Basic Information panel.
4. Select **Upload**.
5. Select a picture from the PC running the client.

   **Note**

   The picture should be in JPG or JPEG format and smaller than 200 KB.
6. **Optional:** Enable **Verify by Device** to check whether the facial recognition device managed in the client can recognize the face in the photo.
7. Confirm to add the person.
   - Click **Add** to add the person and close the Add Person window.
   - Click **Add and New** to add the person and continue to add other persons .

### 7.4.5 Take a Photo via Client

When adding a person, you can take a photo of the her/him via the client and set this photo as the person's profile.

**Before You Start**

Make sure PC running the client has a camera or you have connected other USB camera to the PC.

**Steps**

1. Enter **Person** module.
2. Select an organization in the organization list to add the person and click **Add** to enter Add Person window.

   **Note**

   Enter the person's basic information first. For details, refer to ***Configure Basic Information*** .
3. Click **Add Face** in the Basic Information area.
4. Select **Take Photo** to enter Take Photo window.
5. **Optional:** Enable **Verify by Device** to check whether the captured face photo can meet the uploading requirements.
6. Take a photo.
   1) Face to the camera and make sure your face is in the middle of the collecting window.
   2) Click to capture a face photo.
   3) **Optional:** Click to capture again.
   4) Click **OK** to save the captured photo.

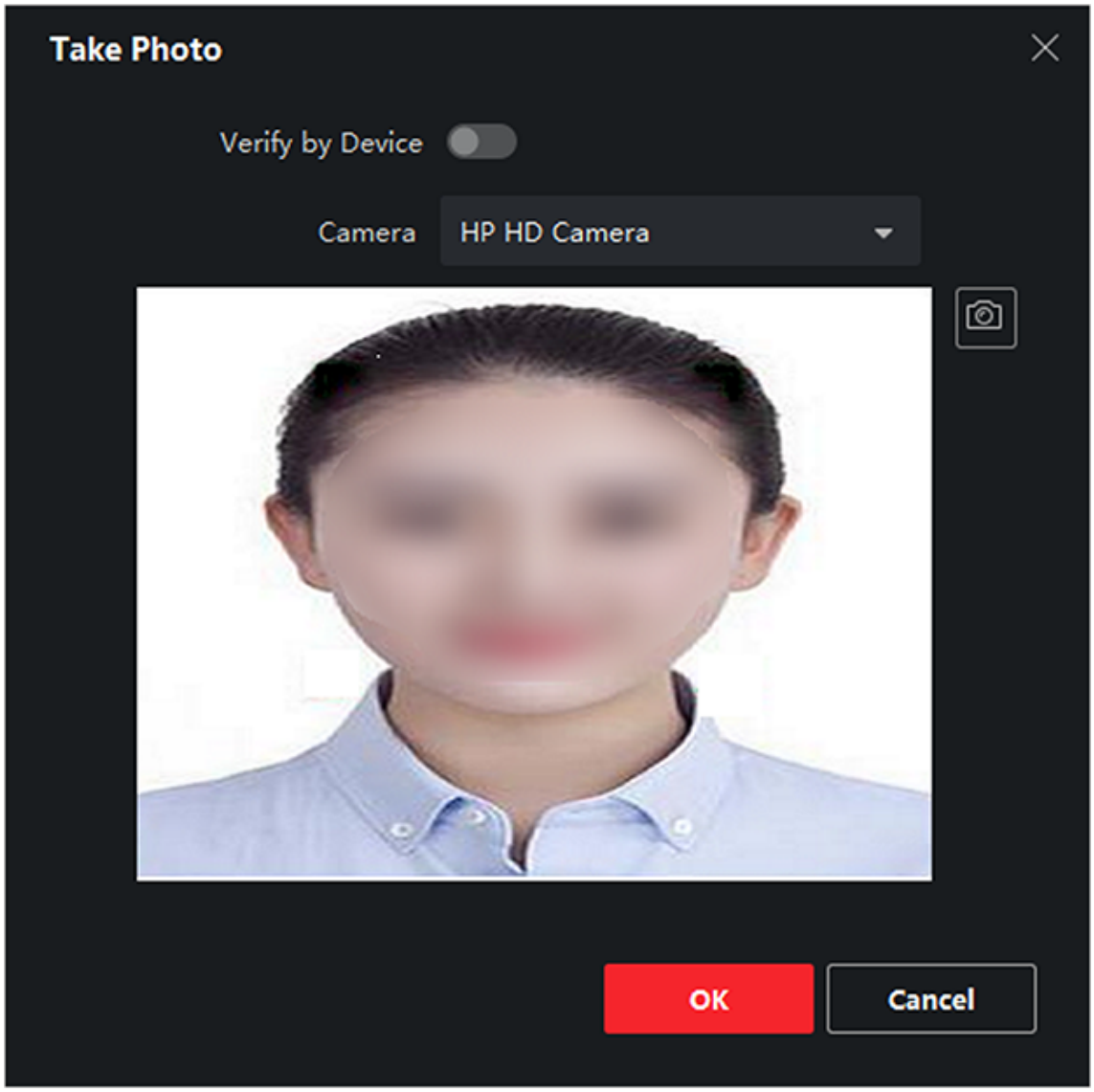


**Figure 7-3 Take a Photo via Client**

7. Confirm to add the person.
   - Click **Add** to add the person and close the Add Person window.
   - Click **Add and New** to add the person and continue to add other persons.

### 7.4.6 Collect Face via Access Control Device

When adding person, you can collect the person's face via access control device added to the client which supports facial recognition function.

**Steps**

1. Enter **Person** module.

2. Select an organization in the organization list to add the person and click **Add**.

**Note**

Enter the person's basic information first. For details about configuring person's basic information, refer to ***Configure Basic Information*** .

3. Click **Add Face** in the Basic Information panel.
4. Select **Remote Collection**.
5. Select an added access control device or the enrollment station from the drop-down list.

**Note**

If you select the enrollment station, you should click **Login** to set related parameters of the device including IP address, port No., user name, and password. Also, you can check **Face Anti-Spoofing** and select the liveness level as Low, Medium, or High.

**Face Anti-Spoofing**

If you check this function, then the device can detect whether the face to be collected is an authentic one.

6. Collect face.
   1) Face to the camera of the selected access control device and make sure your face is in the middle of the collecting window.
   2) Click to capture a photo.
   3) Click **OK** to save the captured photo.
7. Confirm to add the person.
   - Click **Add** to add the person and close the Add Person window.
   - Click **Add and New** to add the person and continue to add other persons .

## 7.4.7 Collect Fingerprint via Client

Collecting fingerprints locally means you can collect the fingerprint via the fingerprint recorder connected directly to the PC running the client. The fingerprints recorded can be used as credentials of the persons to access the authorized doors.

**Before You Start**

Connect the fingerprint recorder to the PC running the client.

**Steps**

1. Enter **Person** module.
2. Select an organization in the organization list to add the person and click **Add**.

**Note**

Enter the person's basic information first. For details about configuring person's basic information, refer to ***Configure Basic Information*** .

3. In the **Credential → Fingerprint** panel, click **+**.
4. In the pop-up window, select the collection mode as **Local**.

5. Select the model of the connected fingerprint recorder.

**Note**

If the fingerprint recorder is DS-K1F800-F, you can click **Settings** to select the COM the fingerprint recorder connects to.

6. Collect the fingerprint.
   1) Click **Start**.
   2) Place and lift your fingerprint on the fingerprint recorder to collect the fingerprint.
   3) Click **Add** to save the recorded fingerprint.
7. Confirm to add the person.
   - Click **Add** to add the person and close the Add Person window.
   - Click **Add and New** to add the person and continue to add other persons.

**Note**

Once the fingerprint is added, the fingerprint type cannot be changed.

### 7.4.8 Collect Fingerprint via Access Control Device

When adding person, you can collect fingerprint information via the access control device's fingerprint module. The fingerprints recorded can be used as credentials of the persons to access the authorized doors.

**Before You Start**

Make sure fingerprint collection is supported by the access control device.

**Steps**

1. Enter **Person** module.
2. Select an organization in the organization list to add the person and click **Add**.

**Note**

Enter the person's basic information first. For details about configuring person's basic information, refer to ***Configure Basic Information*** .

3. In the **Credential → Fingerprint** panel, click **+**.
4. In the pop-up window, select the collection mode as **Remote**.
5. Select an added access control device or the enrollment station from the drop-down list.

**Note**

If you select the enrollment station, you should click **Login**, and set IP address, port No., user name and password of the device.

6. Collect the fingerprint.
   1) Click **Start**.
   2) Place and lift your fingerprint on the fingerprint scanner of the selected access control device to collect the fingerprint.

3) Click **Add** to save the recorded fingerprint.

7. Confirm to add the person.
   - Click **Add** to add the person and close the Add Person window.
   - Click **Add and New** to add the person and continue to add other persons .

### 7.4.9 Configure Access Control Information

When adding a person, you can set her/his access control information, such as binding an access control group with the person, configuring PIN code, setting the person as a visitor, a blocklist person, or a super user, etc.

**Steps**

1. Enter **Person** module.
2. Select an organization in the organization list to add the person and click **Add**.
3. In the **Access Control** area, click to select access group(s) for the person.

**Note**

For details, refer to ***Set Access Group to Assign Access Authorization to Persons*** .

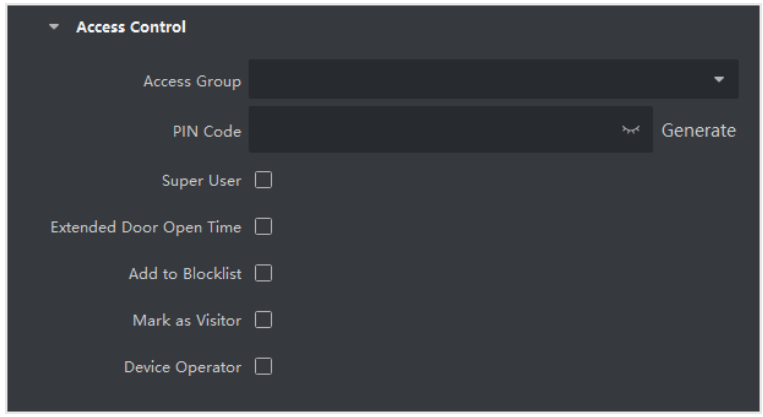


**Figure 7-4 Configure Access Control Information**

4. Set a unique PIN code for the person which can be used for access authentication.
   - Manually enter a PIN code containing 4 to 8 digits.

     **Note**

     Persons' PIN codes cannot be repeated.
   - Click **Generate** to randomly generate an unrepeated PIN code of 6 digits.

     **Note**

     If there are repeated PIN codes, a prompt will pop up on the client. The admin can generate a new PIN code to replace the repeated PIN code and notify related persons.
5. Check the person's operation permissions.

**Super User**

If the person is set as a super user, he/she will have authorization to access all the doors/floors and will be exempted from remaining closed restrictions, all anti-passback rules, and first person authorization.

**Extended Door Open Time**

Use this function for persons with reduced mobility. When accessing the door, the person will have more time than others to pass through doors.

For details about setting the door's open duration, refer to ***Configure Parameters for Door*** .

**Add to Blocklist**

Add the person to the blocklist and when the person tries to access doors/floors, an event will be triggered and sent to the client to notify the security personnel.

**Mark as Visitor**

If the person is a visitor, you should set the her/his valid times for visit.

**Note**

The valid times for visit is between 1 and 100. You can also check **No Limit**, then there are no limited times for the visitor to access doors/floors.

**Device Operator**

For person with device operator role, he/she is authorized to operate on the access control devices.

**Note**

The Super User, Extended Door Open Time, Add to Blocklist, and Mark as Visitor functions cannot be enabled concurrently. For example, if one person is set as super user, you cannot enable extended door open time for her/him, add her/him to the blocklist, or set her/him as visitor.

6. Confirm to add the person.
   - Click **Add** to add the person and close the Add Person window.
   - Click **Add and New** to add the person and continue to add other persons.

### 7.4.10 Customize Person Information

You can customize the person properties which are not pre-defined in the client according to actual needs, e.g., place of birth. After customizing, when add a person, you can enter the custom information to make the person information complete.

**Steps**

1. Enter **Person** module.
2. Set the fields of custom information.
   1) Click **Custom Property**.
   2) Click **Add** to add a new property.

3) Enter the property name.
4) Click **OK**.

**3.** Set the custom information when adding a person.
1) Select an organization in the organization list to add the person and click **Add**.

**Note**

Enter the person's basic information first. For details about configuring person's basic information, refer to ***Configure Basic Information*** .

2) In the **Custom Information** panel, enter the person information.
3) Click **Add** to add the person and close the Add Person window, or click **Add and New** to add the person and continue to add other persons.

### 7.4.11 Configure Resident Information

If the person is resident, for video intercom purpose, you need to set the room number for her/him and bind an indoor station. After bound, you can call this person by calling the indoor station and perform video intercom with her/him.

**Steps**

**1.** Enter **Person** module.

**2.** Select an organization in the organization list to add the person and click **Add**.

**Note**

Enter the person's basic information first. For details about configuring person's basic information, refer to ***Configure Basic Information*** .

**3.** In the **Resident Information** panel, select the indoor station to bind it to the person.

**Note**

If you select **Analog Indoor Station**, the **Door Station** field will display and you are required to select the door station to communicate with the analog indoor station.

**4.** Enter the floor No. and room No. of the person.

**5.** Confirm to add the person.
- Click **Add** to add the person and close the Add Person window.
- Click **Add and New** to add the person and continue to add other persons.

### 7.4.12 Configure Additional Information

When adding person, you can configure the additional information for the person, such as person's identity type, identity No., country, etc., according to actual needs.

**Steps**

**1.** Enter **Person** module.

**2.** Select an organization in the organization list to add the person and click **Add**.

**Note**

Enter the person's basic information first. For details about configuring person's basic information, refer to ***Configure Basic Information*** .

3. In the **Additional Information** panel, enter the additional information of the person, including person's ID type, ID No., job title, etc., according to actual needs.
4. Confirm to add the person.
   - Click **Add** to add the person and close the Add Person window.
   - Click **Add and New** to add the person and continue to add other persons .

### 7.4.13 Import and Export Person Identify Information

You can import the information and pictures of multiple persons to the client software in a batch. Meanwhile, you can also export the person information and pictures and save them in your PC.

### 7.4.14 Import Person Information

You can enter the information of multiple persons in a predefined template (CSV/Excel file) to import the information to the client in a batch.

**Steps**

1. Enter the Person module.
2. Select an added organization in the list, or click **Add** in the upper-left corner to add an organization and then select it.
3. Click **Import** to open the Import panel.
4. Select **Person Information** as the importing mode.
5. Click **Download Template for Importing Person** to download the template.
6. Enter the person information in the downloaded template.

**Note**

- If the person has multiple cards, separate the card No. with semicolon.
- Items with asterisk are required.
- By default, the Hire Date is the current date.

7. Click ··· to select the CSV/Excel file with person information from local PC.
8. Click **Import** to start importing.

**Note**

- If a person No. already exists in the client's database, delete the existing information before importing.
- You can import information of no more than 2,000 persons.

### 7.4.15 Import Person Pictures

After importing face pictures for the added persons to the client, the persons in the pictures can be identified by an added face recognition terminal. You can either import person pictures one by one, or import multiple pictures at a time according to your need.

**Before You Start**
Be sure to have imported person information to the client beforehand.

**Steps**
1. Enter the Person module.
2. Select an added organization in the list, or click **Add** in the upper-left corner to add an organization and then select it.
3. Click **Import** to open the Import panel and check **Face**.
4. **Optional:** Enable **Verify by Device** to check whether face recognition device managed in the client can recognize the face in the photo.
5. Click ... to select a face picture file.

**Note**
- The (folder of) face pictures should be in ZIP format.
- Each picture file should be in JPG format and should be no larger than 200 KB.
- Each picture file should be named as "Person ID_Name". The Person ID should be the same with that of the imported person information.

6. Click **Import** to start importing.
   The importing progress and result will be displayed.

### 7.4.16 Export Person Information

You can export the added persons' information to local PC as a CSV/Excel file.

**Before You Start**
Make sure you have added persons to an organization.

**Steps**
1. Enter the Person module.
2. **Optional:** Select an organization in the list.

**Note**
All persons' information will be exported if you do not select any organization.

3. Click **Export** to open the Export panel.
4. Check **Person Information** as the content to export.
5. Check desired items to export.
6. Click **Export** to save the exported file in CSV/Excel file on your PC.

### 7.4.17 Export Person Pictures

You can export face picture file of the added persons and save in your PC.

**Before You Start**
Make sure you have added persons and their face pictures to an organization.

**Steps**
1. Enter the Person module.
2. **Optional:** Select an organization in the list.

   **Note**
   All persons' face pictures will be exported if you do not select any organization.
3. Click **Export** to open the Export panel and check **Face** as the content to export.
4. Click **Export** to start exporting.

   **Note**
   - The exported file is in ZIP format.
   - The exported face picture is named as "Person ID_Name_0" ("0" is for a full-frontal face).

### 7.4.18 Get Person Information from Access Control Device

If the added access control device has been configured with person information (including person details, fingerprint, and issued card information), you can get the person information from the device and import them to the client for further operations.

**Steps**

**Note**
- If the person name stored in the device is empty, the person name will be filled with the issued card No. after importing to the client.
- If the card number or person ID (employee ID) stored on the device already exists in the client database, the person with this card number or person ID will not be imported to the client.

1. Enter **Person** module.
2. Select an organization to import the persons.
3. Click **Get from Device**.
4. Select an added access control device or the enrollment station from the drop-down list.

   **Note**
   If you select the enrollment station, you should click **Login**, and set IP address, port No., user name and password of the device.
5. Click **Import** to start importing the person information to the client.

**Note**

Up to 2,000 persons and 5,000 cards can be imported.

The person information, including person details, person's fingerprint information (if configured), and the linked cards (if configured), will be imported to the selected organization.

### 7.4.19 Move Persons to Another Organization

You can move the added persons to another organization if you need.

**Before You Start**

- Make sure you have added at least two organizations.
- Make sure you have imported person information.

**Steps**

1. Enter **Person** module.
2. Select an organization in the left panel.

   The persons under the organization will be displayed in the right panel.
3. Select the person to move.
4. Click **Change Organization**.
5. Select the organization to move persons to.
6. Click **OK**.

### 7.4.20 Issue Cards to Persons in Batch

The client provides a convenient way to issue cards to multiple persons in a batch.

**Steps**

1. Enter **Person** module.
2. Click **Batch Issue Cards**.

   All the added persons with no card issued will be displayed in the right panel.
3. **Optional:** Enter key words (name or person ID) in the input box to filter the person(s) that need issuing cards.
4. **Optional:** Click **Settings** to set the card issuing parameters. For details, refer to *Issue a Card by Local Mode*.
5. Click **Initialize** to initialize the card enrollment station or card reader to make it ready for issuing cards.
6. Click the **Card No.** column and enter the card number.
   - Place the card on the card enrollment station.
   - Swipe the card on the card reader.
   - Manually enter the card number and press the **Enter** key.

   The person(s) in the list will be issued with card(s).

### 7.4.21 Report Card Loss

If the person lost his/her card, you can report the card loss so that the card's related access authorization will be inactive.

**Steps**

1. Enter **Person** module.
2. Select the person you want to report card loss for and click **Edit** to open the Edit Person window.
3. In the **Credential → Card** panel, click on the added card to set this card as lost card.

   After reporting card loss, the access authorization of this card will be invalid and inactive. Other person who gets this card cannot access the doors by swiping this lost card.
4. **Optional:** If the lost card is found, you can click to cancel the loss.

   After cancelling card loss, the access authorization of the person will be valid and active.
5. If the lost card is added in one access group and the access group is applied to the device already, after reporting card loss or cancelling card loss, a window will pop up to notify you to apply the changes to the device. After applying to device, these changes can take effect on the device.

### 7.4.22 Set Card Issuing Parameters

The client provides two modes for reading a card's number: via card enrollment station or via the card reader of the access control device. If a card enrollment station is available, connect it to the PC running the client by USB interface or COM, and place the card on the card enrollment to read the card number. If not, you can also swipe the card on the card reader of the added access control device to get the card number. As a result, before issuing a card to one person, you need to set the card issuing parameters including the issuing mode and related parameters.

When adding a card to one person, click **Settings** to open the Card Issuing Settings window.

#### Local Mode: Issue Card by Card Enrollment Station

Connect a card enrollment station to the PC running the client. You can place the card on the card enrollment station to get the card number.

**Card Enrollment Station**

Select the model of the connected card enrollment station

**Note**

Currently, the supported card enrollment station models include DS-K1F100-D8, DS-K1F100-M, DS-K1F100-D8E, and DS-K1F180-D8E.

**Card Type**

This field is only available when the model is DS-K1F100-D8E or DS-K1F180-D8E.

Select the card type as EM card or IC card according to the actual card type.

**Serial Port**

It is only available when the model is DS-K1F100-M.

Select the COM the card enrollment station connects to.

**Buzzing**

Enable or disable the buzzing when the card number is read successfully.

**Card No. Type**

Select the type of the card number according to actual needs.

**M1 Card Encryption**

This field is only available when the model is DS-K1F100-D8, DS-K1F100-D8E, or DS-K1F180-D8E.

If the card is M1 card, and if you need to enable the M1 Card Encryption function, you should enable this function and select the sector of the card to encrypt.

### Remote Mode: Issue Card by Card Reader

Select an access control device added in the client and swipe the card on its card reader to read the card number.

## 7.5 Configure Schedule and Template

You can configure the template including holiday and week schedule. After setting the template, you can adopt the configured template to access groups when setting the access groups, so that the access group will take effect in the time durations of the template.

**Note**

For access group settings, refer to ***Set Access Group to Assign Access Authorization to Persons*** .

### 7.5.1 Add Holiday

You can create holidays and set the days in the holidays, including start date, end date, and holiday duration in one day.

**Steps**

**Note**

You can add up to 64 holidays in the software system.

1. Click **Access Control → Schedule → Holiday** to enter the Holiday page.
2. Click **Add** on the left panel.
3. Create a name for the holiday.
4. **Optional:** Enter the descriptions or some notifications of this holiday in the Remark box.
5. Add a holiday period to the holiday list and configure the holiday duration.

**Note**

Up to 16 holiday periods can be added to one holiday.

1) Click **Add** in the Holiday List field.
2) Drag the cursor to draw the time duration, which means in that duration of time, the configured access group is activated.

   **Note**

   Up to 8 time durations can be set to one holiday period.
3) **Optional:** Perform the following operations to edit the time durations.
   - Move the cursor to the time duration and drag the time duration on the timeline bar to the desired position when the cursor turns to .
   - Click the time duration and directly edit the start/end time in the appeared dialog.
   - Move the cursor to the start or the end of time duration and drag to lengthen or shorten the time duration when the cursor turns to .
4) **Optional:** Select the time duration(s) that need to be deleted, and then click in the Operation column to delete the selected time duration(s).
5) **Optional:** Click in the Operation column to clear all the time duration(s) in the time bar.
6) **Optional:** Click in the Operation column to delete this added holiday period from the holiday list.

**6.** Click **Save**.

### 7.5.2 Add Template

Template includes week schedule and holiday. You can set week schedule and assign the time duration of access authorization for different person or group. You can also select the added holiday(s) for the template.

**Steps**

**Note**

You can add up to 255 templates in the software system.

**1.** Click **Access Control → Schedule → Template** to enter the Template page.

**Note**

There are two default templates: All-Day Authorized and All-Day Denied, and they cannot be edited or deleted.

**All-Day Authorized**

The access authorization is valid in each day of the week and it has no holiday.

**All-Day Denied**

The access authorization is invalid in each day of the week and it has no holiday.

2. Click **Add** on the left panel to create a new template.
3. Create a name for the template.
4. Enter the descriptions or some notification of this template in the Remark box.
5. Edit the week schedule to apply it to the template.
   1) Click **Week Schedule** tab on the lower panel.
   2) Select a day of the week and draw time duration(s) on the timeline bar.

   **Note**

   Up to 8 time duration(s) can be set for each day in the week schedule.

   3) **Optional:** Perform the following operations to edit the time durations.
      - Move the cursor to the time duration and drag the time duration on the timeline bar to the desired position when the cursor turns to .
      - Click the time duration and directly edit the start/end time in the appeared dialog.
      - Move the cursor to the start or the end of time duration and drag to lengthen or shorten the time duration when the cursor turns to .
   4) Repeat the two steps above to draw more time durations on the other days of the week.
6. Add a holiday to apply it to the template.

   **Note**

   Up to 4 holidays can be added to one template.

   1) Click **Holiday** tab.
   2) Select a holiday in the left list and it will be added to the selected list on the right panel.
   3) **Optional:** Click **Add** to add a new holiday.

   **Note**

   For details about adding a holiday, refer to ***Add Holiday*** .

   4) **Optional:** Select a selected holiday in the right list and click to remove the selected one, or click **Clear** to clear all the selected holiday(s) in the right list.
7. Click **Save** to save the settings and finish adding the template.

## 7.6 Set Access Group to Assign Access Authorization to Persons

After adding the person and configuring the person's credentials, you can create the access groups to define which person(s) can get access to which door(s) and then apply the access group to the access control device to take effect.

**Before You Start**

- Add person to the client.
- Add access control device to the client and group access points. For details, refer to ***Group Management*** .
- Add template.

**Steps**

When the access group settings are changed, you need to apply the access groups to the devices again to take effect. The access group changes include changes of template, access group settings, person's access group settings, and related person details (including card number, fingerprint, face picture, linkage between card number and fingerprint, linkage between card number and fingerprint, card password, card effective period, etc).

1. Click **Access Control → Authorization → Access Group** to enter the Access Group interface.
2. Click **Add** to open the Add window.
3. In the **Name** text field, create a name for the access group as you want.
4. Select a template for the access group.

   **Note**

   You should configure the template before access group settings. Refer to ***Configure Schedule and Template*** for details.

5. In the left list of the Select Person field, select person(s) to assign access authority.
6. In the left list of the Select Access Point field, select door(s), door station(s) or floor(s) for the selected persons to access.
7. Click **Save**.

   You can view the selected person(s) and the selected access point(s) on the right side of the interface.

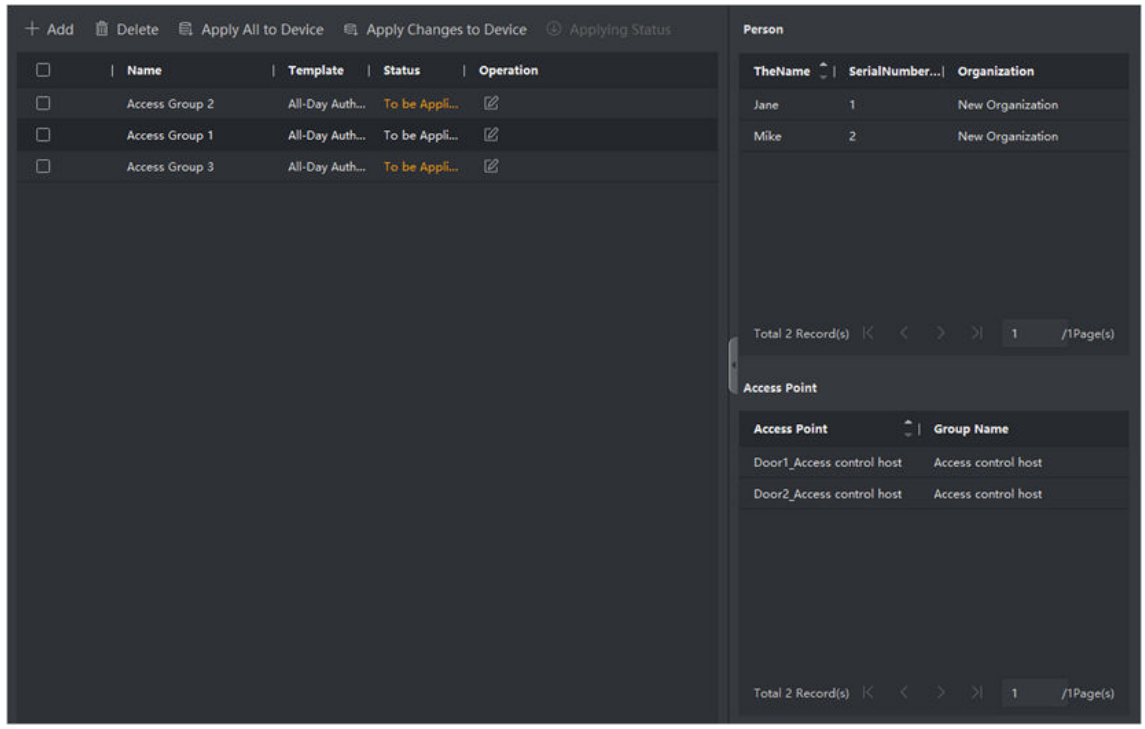


**Figure 7-5 Display the Selected Person(s) and Access Point(s)**

8. After adding the access groups, you need to apply them to the access control device to take effect.
   1) Select the access group(s) to apply to the access control device.
   2) Click **Apply All to Devices** start applying all the selected access group(s) to the access control device or door station.
   3) Click **Apply All to Devices** or **Apply Changes to Devices**.

      **Apply All to Devices**

      This operation will clear all the existed access groups of the selected devices and then apply the new access group to the device.

      **Apply Changes to Devices**

      This operation will not clear the existed access groups of the selected devices and only apply the changed part of the selected access group(s) to the device(s).
   4) View the applying status in the Status column or click **Applying Status** to view all the applied access group(s).

      **Note**

      You can check **Display Failure Only** to filter the applying results.

   The selected persons in the applied access groups will have the authorization to enter/exit the selected doors/door stations with their linked card(s) or fingerprints.
9. **Optional:** Click to edit the access group if necessary.

**Note**

If you change the persons' access information or other related information, you will view the prompt **Access Group to Be Applied** on the right corner of the client.
You can click the prompt to apply the changed data to the device. You can select either **Apply Now** or **Apply Later**.

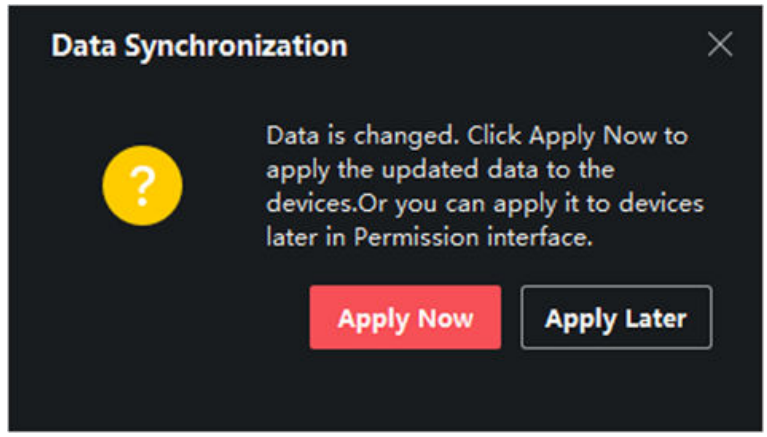


**Figure 7-6 Data Synchronization**

## 7.7 Configure Advanced Functions

You can configure the advanced functions of access control to meet some special requirements in different scene.

**Note**

- For the card related functions(the type of access control card), only the card(s) with access group applied will be listed when adding cards.
- The advanced functions should be supported by the device.
- Hover the cursor on the Advanced Function, and then Click to customize the advanced function(s) to be displayed.

### 7.7.1 Configure Device Parameters

After adding the access control device, you can configure the parameters of access control device, access control points.

#### Configure Parameters for Access Control Device

After adding the access control device, you can configure its parameters.

**Steps**

1. Click **Access Control → Advanced Function → Device Parameter** .

**Note**

If you can find Device Parameter in the Advanced Function list, Hover the cursor on the Advanced Function, and then Click to select the Device Parameter to be displayed.

2. Select an access device to show its parameters on the right page.
3. Turn the switch to ON to enable the corresponding functions.

**Note**

The displayed parameters may vary for different access control devices.

**RS-485 Communication Redundancy**

You should enable this function if you wire the RS-485 card reader to the access control device redundantly.

**Enable NFC**

If enable the function, the device can recognize the NFC card. You can present NFC card on the device.

**Enable M1 Card**

If enable the function, the device can recognize the M1 card. You can present M1 card on the device.

**Enable EM Card**

If enable the function, the device can recognize the EM card. You can present EM card on the device.

**Enable CPU Card**

Reserved. If enable the function, the device can recognize the CPU card. You can present CPU card on the device.

**Enable ID Card**

Reserved. If enable the function, the device can recognize the ID card. You can present ID card on the device.

4. Click **OK**.
5. **Optional:** Click **Copy to**, and then select the access control device(s) to copy the parameters in the page to the selected device(s).

## Configure Parameters for Door

After adding the access control device, you can configure its access point door parameters.

**Steps**

1. Click **Access Control → Advanced Function → Device Parameter** .

2. Select an access control device on the left panel, and then click ▸ to show the doors or floors of the selected device.
3. Select a door or floor to show its parameters on the right page.
4. Edit the door or floor parameters.

**Note**

s
The displayed parameters may vary for different access control devices.

**Name**

Edit the card reader name as desired.

**Exit Button Type**

You can set the exit button as remaining closed or remaining open. Usually, it is remaining open.

**Open Duration**

After swiping the normal card and relay action, the time for locking the door starts working.

**Door Left Open Timeout Alarm**

The alarm can be triggered if the door has not been closed in a configured time period. If it is set as 0, no alarm will be triggered.

**Super Password**

The specific person can open the door by inputting the super password.

5. Some of the following parameters are not listed in the Basic Information page, click **Advanced** to edit the parameters.

**Duress Code**

The door can open by inputting the duress code when there is duress. At the same time, the client can report the duress event.

**Dismiss Code**

Create a dismiss code which can be used to stop the buzzer of the card reader (by entering the dismiss code on the keypad).

**Note**

- The duress code, super code, and dismiss code should be different.
- The duress code, super password, and the dismiss code should be different from the authentication password.
- The length of duress code, super password, and the dismiss code is according the device, usually it should contains 4 to 8 digits.

6. Click **OK**.
7. **Optional:** Click **Copy to** , and then select the door(s) to copy the parameters in the page to the selected doors(s).

**Note**

The door's status duration settings will be copied to the selected door(s) as well.

## Configure Parameters for Card Reader

After adding the access control device, you can configure its card reader parameters.

**Steps**

1. Click **Access Control → Advanced Function → Device Parameter** .
2. In the device list on the left, click ▸ to expand the door, select a card reader and you can edit the card reader's parameters on the right.
3. Edit the card reader basic parameters in the Basic Information page.

**Note**

The displayed parameters may vary for different access control devices. There are part of parameters listed as follows. Refer to the user manual of the device for more details.

**Name**

Edit the card reader name as desired.

**Minimum Card Swiping Interval**

If the interval between card swiping of the same card is less than the set value, the card swiping is invalid. You can set it as 0 to 255.

**Alarm of Max. Failed Attempts**

Enable to report alarm when the card reading attempts reach the set value.

**Card Reader Type/Card Reader Description**

Get card reader type and description. They are read-only.

4. **Optional:** Some of the following parameters are not listed in the Basic Information page, click **Advanced** to edit the parameters.

**Enable Card Reader**

If enabling the function, user can present card on the card reader. If disabling the function, the card reader for entrance cannot be used.

**OK LED Polarity/Error LED Polarity/Buzzer Polarity**

Set OK LED Polarity/Error LED Polarity/Buzzer LED Polarity of main board according to the card reader parameters. Generally, adopts the default settings.

**Buzzing Time**

Set the card reader buzzing time. The available time ranges from 0 to 5,999s. 0 represents continuous buzzing.

**Max. Interval When Entering PWD**

When you inputting the password on the card reader, if the interval between pressing two digits is larger than the set value, the digits you pressed before will be cleared automatically.

**Tampering Detection**

Enable the anti-tamper detection for the card reader.

**Communicate with Controller Every**

When the access control device cannot connect with the card reader for longer than the set time, the card reader will turn offline automatically.

**Fingerprint Recognition Level**

Select the fingerprint recognition level in the drop-down list.

5. Click **OK**.
6. **Optional:** Click **Copy to**, and then select the card reader(s) to copy the parameters in the page to the selected card reader(s).

## Configure Parameters for Alarm Output

After adding the access control device, if the device links to alarm outputs, you can configure the parameters.

**Before You Start**

Add access control device to the client, and make sure the device supports alarm output.

**Steps**

1. Click **Access Control → Advanced Function → Device Parameter** to enter access control parameter configuration page.
2. In the device list on the left, click ▸ to expand the door, select an alarm input and you can edit the alarm input's parameters on the right.
3. Set the alarm output parameters.

   **Name**

   Edit the card reader name as desired.

   **Alarm Output Active Time**

   How long the alarm output will last after triggered.
4. Click **OK**.
5. **Optional:** Set the switch on the upper right corner to **ON** to trigger the alarm output.

## Configure Parameters for Lane Controller

After adding the lane controller to the client, you can configure its parameters for passing through the lane.

**Steps**

1. Click **Access Control → Advanced Function → Device Parameter** to enter Parameter Settings page.
2. In the device list on the left, select a lane controller and you can edit the lane controller's parameters on the right.
3. Edit the parameters.

**Passing Mode**

Select the controller which will control the barrier status of the device.

- If you select **According to DIP Settings**, the device will follow the controller's DIP settings to control the barrier. The settings on the software will be invalid.
- If you select **According to Door's Schedule Settings**, the device will follow the schedule configured in the client software to control the barrier. The DIP settings of the controller will be invalid.

**Enable Free Passing Authentication**

After enabling free passing authentication, an alarm will be triggered when the passing personnel has no permission to pass through.

**Opening/Closing Barrier Speed**

Set the barrier's opening and closing speed. You can select from 1 to 10. The greater the value, the faster the speed.

**Note**

The recommended value is 6.

**Alarm Voice Prompt Duration**

Set how long the audio will last, which is played when an alarm is triggered.

**Note**

0 refers to the alarm audio will be played until the alarm is ended.

**Temperature Unit**

Select the temperature unit that displayed in the device status.

**Lightboard Brightness**

Set the lightboard brightness.

**Barrier Material**

Select the material of the barrier gate. You can select the barrier material from the drop-down list.

**Note**

The barrier material will affect the device working. Select a correct barrier material or the barrier may not open.

**Lane Length**

The width of the lane. You can set the lane width.

**Note**

The lane width will affect the device working. Set a correct lane width or the barrier may not open.

**Do Not Open Barrier When Lane is Not Clear**

If there is someone or something in the lane, the gate will not open even if the credential is authenticated.

This function is designed to avoid more than one person passing through the gate with only one authentication.

4. Click **OK**.

## 7.7.2 Configure Remaining Open/Closed

You can set the status of the door as open or closed. For example, you can set the door remaining closed in the holiday, and set the door remaining open in the specified period of the work day.

**Before You Start**

Add the access control devices to the system.

**Steps**

1. Click **Access Control → Advanced Function → Remain Open/Closed** to enter the Remain Open/Closed page.
2. Select the door that need to be configured on the left panel.
3. To set the door status during the work day, click the **Week Schedule** and perform the following operations.
   1) Click **Remain Open** or **Remain Closed**.
   2) Drag the cursor to draw the time duration, which means in that duration of time, the configured access group is activated.

   **Note**

   Up to 8 time durations can be set to each day in the week schedule.

   3) **Optional:** Perform the following operations to edit the time durations.
      - Move the cursor to the time duration and drag the time duration on the timeline bar to the desired position when the cursor turns to .
      - Click the time duration and directly edit the start/end time in the appeared dialog.
      - Move the cursor to the start or the end of time duration and drag to lengthen or shorten the time duration when the cursor turns to .
   4) Click **Save**.

   **Related Operations**

| | |
|---|---|
| **Copy to Whole Week** | Select one duration on the time bar, click **Copy to Whole Week** to copy all the duration settings on this time bar to other week days. |
| **Delete Selected** | Select one duration on the time bar, click **Delete Selected** to delete this duration. |
| **Clear** | Click **Clear** to clear all the duration settings in the week schedule. |

4. To set the door status during the holiday, click the **Holiday** and perform the following operations.
   1) Click **Remain Open** or **Remain Closed**.
   2) Click **Add**.
   3) Enter the start date and end date.
   4) Drag the cursor to draw the time duration, which means in that duration of time, the configured access group is activated.

   **Note**

   Up to 8 time durations can be set to one holiday period.

   5) Perform the following operations to edit the time durations.
      - Move the cursor to the time duration and drag the time duration on the timeline bar to the desired position when the cursor turns to .
      - Click the time duration and directly edit the start/end time in the appeared dialog.
      - Move the cursor to the start or the end of time duration and drag to lengthen or shorten the time duration when the cursor turns to .
   6) **Optional:** Select the time duration(s) that need to be deleted, and then click in the Operation column to delete the selected time duration(s).
   7) **Optional:** Click in the Operation column to clear all the time duration(s) in the time bar.
   8) **Optional:** Click in the Operation column to delete this added holiday period from the holiday list.
   9) Click **Save**.
5. **Optional:** Click **Copy to** to copy the door status settings of this door to other door(s).

### 7.7.3 Configure Multi-Factor Authentication

You can manage the persons by group and set the authentication for multiple persons of one access control point (door).

**Before You Start**

Set access group and apply the access group to the access control device. For details, refer to ***Set Access Group to Assign Access Authorization to Persons*** .

Perform this task when you want to set authentications for multiple cards of one access control point (door).

**Steps**

1. Click **Access Control → Advanced Function → Multi-Factor Auth** .
2. Select an access control device in device list on the left panel.

3. Add a person/card group for the access control device.
   1) Click **Add** on the right panel.
   2) Create a name for the group as desired.
   3) Specify the start time and end time of the effective period for the person/card group.
   4) Select members(s) and card(s) in the Available list, and the selected member(s) and card(s) will be added to the Selected list.

   **Note**

   Make sure you have issue card to the person.
   Make sure you have set access group and apply the access group to the access control device successfully.

   5) Click **Save**.
   6) **Optional:** Select the person/card group(s), and then click **Delete** to delete it(them).
   7) **Optional:** Select the person/card group(s), and then click **Apply** to re-apply access group that failed to be applied previously to the access control device.
4. Select an access control point (door) of selected device on the left panel.
5. Enter the maximum interval when entering password.
6. Add an authentication group for the selected access control point.
   1) Click **Add** on the Authentication Groups panel.
   2) Select a configured template as the authentication template from the drop-down list.

   **Note**

   For setting the template, refer to ***Configure Schedule and Template*** .

   3) Select the authentication type as **Local Authentication**, **Local Authentication and Remotely Open Door**, or **Local Authentication and Super Password** from the drop-down list.

   **Local Authentication**

   Authentication by the access control device.

   **Local Authentication and Remotely Open Door**

   Authentication by the access control device and by the client. When the person swipes the card on the device, a window will pop up. You can unlock the door via the client.

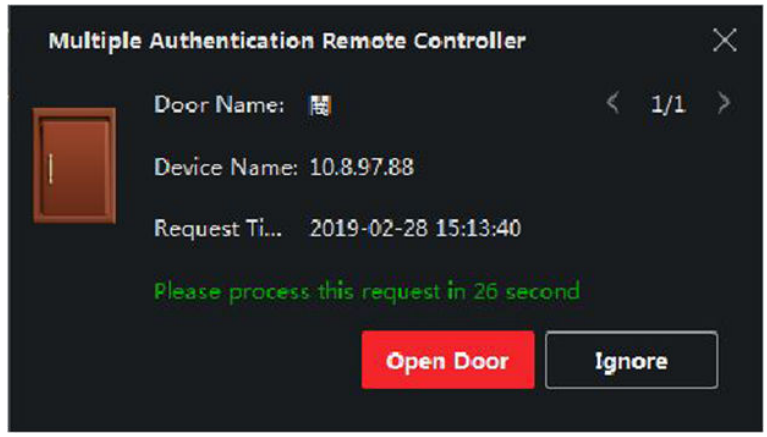


**Figure 7-7 Remotely Open Door**

**Note**

You can check **Offline Authentication** to enable the super password authentication when the access control device is disconnected with the client.

**Local Authentication and Super Password**

Authentication by the access control device and by the super password.

4) Select the added person/card group in the left list below and it will be added to the Selected list on the right as the authentication group.
5) Click the added authentication group in the right list to set authentication times in the Auth Times column.

**Note**

- The authentication times should be larger than 0 and smaller than the added personnel quantity in the personnel group.
- The maximum value of authentication times is 16.

6) Click **Save**.

**Note**

- For each access control point (door), up to four authentication groups can be added.
- For the authentication group of which authentication type is **Local Authentication**, up to 8 person/card groups can be added to the authentication group.
- For the authentication group of which authentication type is **Local Authentication and Super Password** or **Local Authentication and Remotely Open Door**, up to 7 person/card groups can be added to the authentication group.

**7.** Click **Save**.

### 7.7.4 Configure Custom Wiegand Rule

Based on the knowledge of uploading rule for the third party Wiegand, you can set multiple customized Wiegand rules to communicate between the device and the third party card readers.

**Before You Start**

Wire the third party card readers to the device.

**Steps**

**Note**

- By default, the device disables the custom wiegand function. If the device enables the custom Wiegand function, all wiegand interfaces in the device will use the customized wiegand protocol.
- Up to 5 custom Wiegands can be set.
- For details about the custom Wiegand, see Custom Wiegand Rule Descriptions.

1. Click **Access Control → Advanced Function → Custom Wiegand** to enter the Custom Wiegand page.
2. Select a custom Wiegand on the left.
3. Create a Wiegand name.

   **Note**

   Up to 32 characters are allowed in the custom Wiegand name.
4. Click **Select Device** to select the access control device for setting the custom wiegand.
5. Set the parity mode according to the property of the third party card reader.

   **Note**

   - Up to 80 bits are allowed in the total length.
   - The odd parity start bit, the odd parity length, the even parity start bit and the even parity length range from 1 to 80 bit.
   - The start bit of the card ID, the manufacturer code, the site code, and the OEM should range from 1 to 80 bit.
6. Set output transformation rule.

   1) Click **Set Rule** to open the Set Output Transformation Rules window.

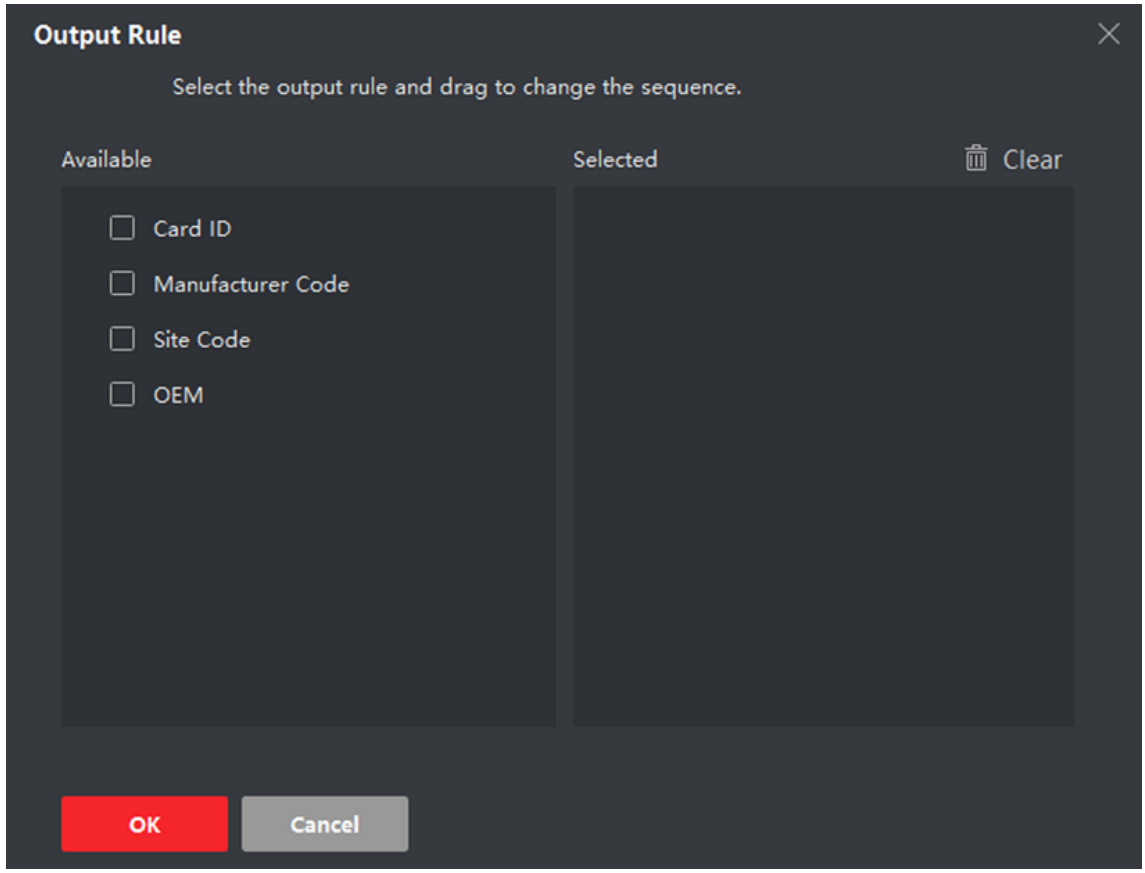


**Figure 7-8 Set Output Transformation Rule**

2) Select rules on the left list.

   The selected rules will be added to the right list.

3) **Optional:** Drag the rules to change the rule order.
4) Click **OK**.
5) In the Custom Wiegand tab, set the rule's start bit, length, and the decimal digit.

**7.** Click **Save**.

### 7.7.5 Configure Card Reader Authentication Mode and Schedule

You can set the passing rules for the card reader of the access control device according to your actual needs.

**Steps**

**1.** Click **Access Control → Advanced Function → Authentication** to enter the authentication mode configuration page.

**2.** Select a card reader on the left to configure.

**3.** Set card reader authentication mode.

1) Click **Configuration**.

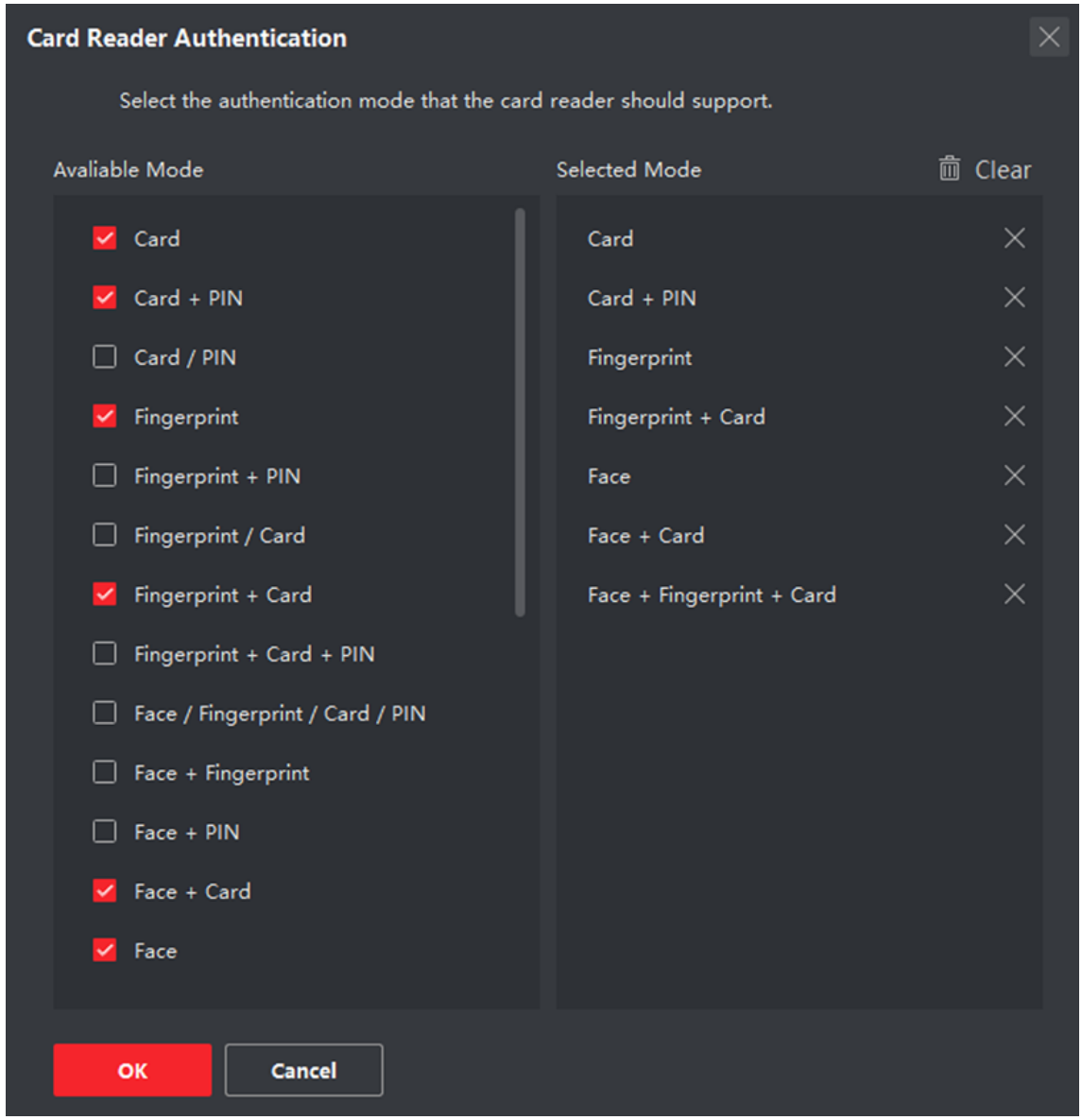


**Figure 7-9 Select Card Reader Authentication Mode**

**Note**

PIN refers to the PIN code set to open the door. Refer to ***Configure Access Control Information*** .

2) Check the modes in the Available Mode list and they will be added to the selected modes list.
3) Click **OK**.

After selecting the modes, the selected modes will display as icons with different color.

**4.** Click the icon to select a card reader authentication mode, and drag the cursor to draw a color bar on the schedule, which means in that period of time, the card reader authentication is valid.

**5.** Repeat the above step to set other time periods.

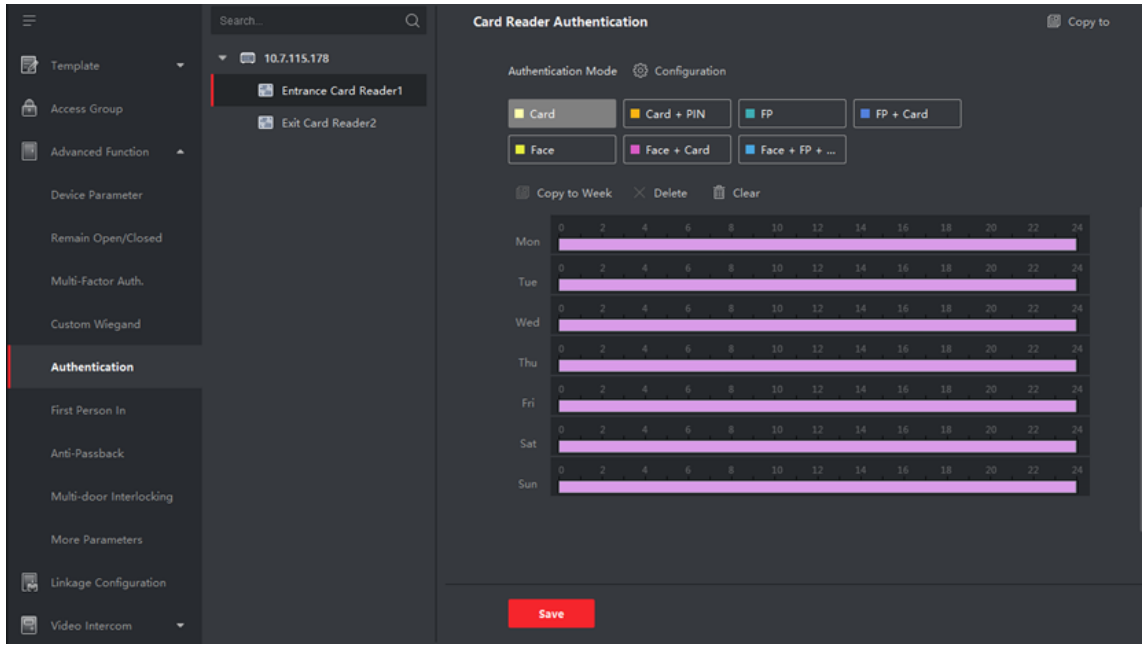


**Figure 7-10 Set Authentication Modes for Card Readers**

6. **Optional:** Select a configured day and click **Copy to Week** to copy the same settings to the whole week.
7. **Optional:** Click **Copy to** to copy the settings to other card readers.
8. Click **Save**.

## 7.7.6 Configure First Person In

You can set multiple first persons for one access control point. After the first person is authorized, it allows multiple persons access the door or other authentication actions.

**Before You Start**

- Add access control device to the client, and make sure the device supports the first person in function.
- Add person and assign access authorization to designed person. For details, refer to ***Person Management*** and ***Set Access Group to Assign Access Authorization to Persons*** .

**Steps**

1. Click **Access Control → Advanced Function → First Person In** to enter the First Person In page.
2. Select an access control device in the list on the left panel.
3. Select the current mode as **Enable Remaining Open after First Person**, **Disable Remaining Open after First Person**, or **Authorization by First Person** from the drop-down list for each access control point of the selected device.

   **Enable Remaining Open after First Person**

The door remains open for the configured time duration after the first person is authorized until the remain open duration ends. If you select this mode, you should set the remain open duration.

**Note**

The remain open duration should be between 0 and 1440 minutes. By default, the remain open duration is 10 minutes.

**Disable Remaining Open after First Person**

Disable the function of first person in, namely normal authentication.

**Authorization by First Person**

All authentications (except for the authentications of super card, super password, duress card, and duress code) are allowed only after the first person authorization.

**Note**

You can authenticate by the first person again to disable the first person mode.

4. Click **Add** on the First Person List panel.
5. Select person(s) in the left list and the person(s) will be add to the selected persons as the first person(s) of the doors.

   The added first person(s) will list in the First Person List
6. **Optional:** Select a first person from the list and click **Delete** to remove the person from the first person list.
7. Click **Save**.

### 7.7.7 Configure Anti-Passback

The anti-passback feature is designed to minimizes the misuse or fraudulent use of access credentials such as passing back card to an unauthorized person, or tailed access. The anti-passback function establishes a specific sequence in which access credentials must be used in order to grant access. You can set the sequence according to the actual path via the client and if the person uses the credential in wrong sequence, you can also reset the anti-password records.

**Before You Start**

Add access control device to the client, and enable the anti-passing back function of the access control device.

**Steps**

**Note**

Either the anti-passing back or multi-door interlocking function can be configured for an access control device at the same time. For the configuration of multi-door interlocking, refer to .

1. Click **Access Control → Advanced Function → Anti-Passback** to enter the Anti-Passpack Settings page.

2. Select an access control device on the left panel.
3. Select a card reader as the beginning of the path in the **First Card Reader** field.
4. Click ✎ of the selected first card reader in the **Card Reader Afterward** column to open the select card reader dialog.
5. Select the afterward card readers for the first card reader.

**Note**

Up to four afterward card readers can be added as afterward card readers for one card reader.

6. Click **OK** in the dialog to save the selections.
7. Click **Save** in the Anti-Passback Settings page to save the settings and take effect.

**Example**

Set Card Swiping Path: If you select Reader In_01 as the beginning, and select Reader In_02, Reader Out_04 as the linked card readers. Then you can only get through the access control point by swiping the card in the order as Reader In_01, Reader In_02 and Reader Out_04.

8. Click **Reset Anti-Passback** and select the person(s) to delete the related anti-passback records about the person(s) on the device.

**Note**

This function should be supported by the device.

## 7.7.8 Configure Device Parameters

After adding the access control device, you can set its parameters such as network parameters.

### Set RS-485 Parameters

You can set the access control device's RS-485 parameters including the baud rate, data bit, the stop bit, parity type, flow control type, communication mode, work mode, and connection mode.

**Steps**

**Note**

The RS-485 Settings should be supported by the device.

1. Enter the Access Control module.
2. On the navigation bar on the left, enter **Advanced Function → More Parameters** .
3. Select an access control device in the device list and click **RS-485** to enter the RS-485 Settings page.
4. Select the serial port number from the drop-down list to set the RS-485 parameters.
5. Set the serial number, external device, authentication center, baud rate, data bit, stop bit, parity type, flow control type, communication mode, and working mode in the drop-down list.
6. Click **Save**.

- The configured parameters will be applied to the device automatically.
- When you change the working mode or connection mode, the device will reboot automatically.

### Enable M1 Card Encryption

M1 card encryption can improve the security level of authentication.

**Steps**

**Note**

The function should be supported by the access control device and the card reader.

1. Enter the Access Control module.
2. On the navigation bar on the left, enter **Advanced Function → More Parameters** .
3. Select an access control device in the device list and click **M1 Card Encryption Verification** to enter the M1 Card Encryption Verification page.
4. Set the switch to on to enable the M1 card encryption function.
5. Set the sector ID.

   **Note**

   - The sector ID ranges from 1 to 100.
   - By default, Sector 13 is encrypted. It is recommended to encrypt sector 13.
6. Click **Save** to save the settings.

## 7.8 Configure Linkage Actions for Access Control

You can configure different linkage actions for the event detected by the access control device. After that, linkage actions will be triggered once the event happens. This mechanism is used for notifying the security personnel the event, or triggering automatic access control in real time.

Two types of linkage actions are supported:

- **Client Actions:** When the event is detected, it will trigger the actions on the client, such as the client making an audible warning..
- **Device Actions:** When the event is detected, it will trigger the actions of a specific device, such as buzzing of a card reader and, opening/closing of a door, ..

### 7.8.1 Configure Client Actions for Access Event

Even if you are far away from an access point, you can still know what happens and how urgent the event is via the client by configuring client actions for the access event. Client actions here refer to the actions automatically executed by the client itself, such as making an audible warning and

sending an email. Once an event is triggered, the client will notify the security personnel, so that he/she can handle the event in time.

**Before You Start**

Add access control device to the client.

**Steps**

1. Click **Event Configuration → Access Control Event** .

   The added access control devices will display in the device list.
2. Select a resource (including device, alarm input, door, and card reader) from the device list.

   The event types which the selected resource supports appear.
3. Select the event(s) and click **Edit Priority** to define the priority for the event(s), which can be used to filter events in the Event Center.
4. Set the linkage actions of the event.

   1) Select the event(s) and click **Edit Linkage** to set the client actions when the event(s) are triggered.

   **Audible Warning**

   The client software gives an audible warning when the event is triggered. You can select alarm sound for the audible warning.

   **Note**

   For details about setting the alarm sound, refer to *Set Alarm Sound* in the user manual of the client software.

   **Send Email**

   Send an email notification about the event to one or more receivers.

   For details about setting email parameters, refer to *Set Email Parameters* in the user manual of the client software.

   2) Click **OK**.
5. Enable the event so that when the event is detected, event will be sent to the client and the linkage actions will be triggered.
6. **Optional:** Click **Copy to** to copy the event settings to other access control device, alarm input, door, or card reader.

## 7.8.2 Configure Device Actions for Access Event

You can set the access control device's linkage actions for the access control device's triggered event. After that, when an event is triggered, it can trigger the alarm output, buzzer on access controller, and other actions.

**Steps**

**Note**

The linkage actions should be supported by the device.

1. Click **Access Control → Linkage Configuration** .
2. Select the access control device from the list on the left.
3. Click **Add** to add a new linkage.
4. Select **Event Linkage** as the event source.
5. select the event type and detailed event to set the linkage.
6. In the Linkage Target area, set the property target to enable this action.

   **Buzzer on Controller**

   The audible warning of access control device will be triggered.

   **Capture**

   An event-related picture will be captured when the selected event happens.

   **Recording**

   An event-related picture will be captured when the selected event happens.

   **Note**

   The device should support recording.

   **Buzzer on Reader**

   The audible warning of card reader will be triggered.

   **Alarm Output**

   The alarm output will be triggered for notification when the selected event happens

   **Alarm Input**

   Arm or disarm the alarm input.

   **Note**

   The device should support alarm input function.

   **Access Point**

   The door status of open, close, remain open, or remain close will be triggered.

   **Note**

   The target door and the source door cannot be the same one.

   **Audio Play**

   The audio prompt will be triggered. And the select audio index related audio content will be played according to the configured play mode.
7. Click **Save**.

8. **Optional:** After adding the device linkage, you can do one or more of the followings:

| | |
|---|---|
| **Edit Linkage Settings** | Select the configured linkage settings in the device list and you can edit its event source parameters, including event source and linkage target. |
| **Delete Linkage Settings** | Select the configured linkage settings in the device list and click **Delete** to delete it. |

### 7.8.3 Configure Device Actions for Card Swiping

You enable access control device's linkage actions (such as disarming a zone and triggering audio prompt) for the swiping of a specific card, In this way, you can monitor the card holder's behaviors and whereabouts.

**Steps**

**Note**

It should be supported by the device.

1. Click **Access Control → Linkage Configuration** .
2. Select the access control device from the list on the left.
3. Click **Add** to add a new linkage.
4. Select **Card Linkage** as the event source.
5. Enter the card number or select the card from the drop-down list.
6. Select the card reader where the card swipes.
7. In the Linkage Target area, set the property target to enable this action.

   **Buzzer on Controller**

   The audible warning of access control device will be triggered.

   **Buzzer on Reader**

   The audible warning of card reader will be triggered.

   **Capture**

   An event-related picture will be captured when the selected event happens.

   **Recording**

   An event-related picture will be captured when the selected event happens.

   **Note**

   The device should support recording.

   **Alarm Output**

   The alarm output will be triggered for notification.

   **Alarm Input**

   Arm or disarm the alarm input.

**Note**

The device should support alarm input function.

**Access Point**

The door status of open, close, remain open, or remain closed will be triggered.

**Audio Play**

The audio prompt will be triggered. And the select audio index related audio content will be played according to the configured play mode.

8. Click **Save**.

When the card (configured in Step 5) swipes on the card reader (configured in Step 6), it can trigger the linked actions (configured in step 7).

9. **Optional:** After adding the device linkage, you can do one or more of the followings:

| | |
|---|---|
| **Delete Linkage Settings** | Select the configured linkage settings in the device list and click **Delete** to delete it. |
| **Edit Linkage Settings** | Select the configured linkage settings in the device list and you can edit its event source parameters, including event source and linkage target. |

## 7.9 Door Control

In Monitoring module, you can view the real-time status of the doors managed by the added access control device. You can also control the doors such as open/close the door, or remain the door open/closed via the client remotely. The real-time access event are displayed in this module. You can view the access details and person details.

**Note**

For the user with door control permission, the user can enter the Monitoring module and control the door. Or the icons used for control will not show. For setting the user permission, refer to ***Person Management*** .

### 7.9.1 Control Door Status

You can control the status for the door(s), including unlock door, locking door, remaining the door unlock, remaining the door locked, remain all unlocked, etc.

**Before You Start**

- Add person and assign access authorization to designed person, and person will have the access authorization to the access points (doors). For details, refer to ***Person Management*** and ***Set Access Group to Assign Access Authorization to Persons*** .
- Make sure the operation user has the permission of the access points (doors).

**Steps**

1. Click **Monitoring** to enter the status monitoring page.
2. Select an access point group on the upper-right corner.

   **Note**

   For managing the access point group, refer to ***Group Management*** .

   The doors in the selected access control group will display.
3. Click a door icon to select a door, or press **Ctrl** and select multiple doors.

   **Note**

   For **Remain All Unlocked** and **Remain All Locked**, ignore this step.
4. Click the following buttons to control the door.

   **Unlock**

   When the door is locked, unlock it and it will be open for once. After the open duration, the door will be closed and locked again automatically.

   **Lock**

   When the door is unlocked, lock it and it will be closed. The person who has the access authorization can access the door with credentials.

   **Remain Unlocked**

   The door will be unlocked (no matter closed or open). All the persons can access the door with no credentials required.

   **Remain Locked**

   The door will be closed and locked. No person can access the door even if he/she has the authorized credentials, except the super users.

   **Remain All Unlocked**

   All doors in the group will be unlocked (no matter closed or open). All the persons can access the doors with no credentials required.

   **Remain All Locked**

   All doors in the group will be closed and locked. No person can access the doors even if he/she has the authorized credentials, except the super users.

   **Capture**

   Capture a picture manually.

   **Note**

   The **Capture** button is available when the device supports capture function. The picture is saved in the PC running the client. For setting the saving path, refer to *Set File Saving Path* in the user manual of the client software.

**Result**

The icon of the doors will change in real-time according to the operation if the operation is succeeded.

### 7.9.2 Check Real-Time Access Records

The access records will display in real time, including card swiping records, face recognitions records, fingerprint comparison records, etc. You can view the person information and view the picture captured during access.

**Steps**

1. Click **Monitoring** and select a group from the drop-down list on the upper-right corner.

   The access records triggered at the doors in the selected group will display in real time. You can view the details of the records, including card No., person name, organization, event time, etc.
2. **Optional:** Check the event type and event status so that these events will show in the list if the events are detected. The events of unchecked type or status will not be displayed in the list.
3. **Optional:** Check **Show Latest Event** and the latest access record will be selected and displayed at the top of the record list.
4. **Optional:** Click the event to view the accessed person details, including person pictures (captured picture and profile), person No., person name, organization, phone, contact address, etc.

   **Note**

   You can double click the captured picture to enlarge it to view the details.
5. **Optional:** Right click on the column name of the access event table to show or hide the column according to actual needs.

## 7.10 Event Center

The event information (for example, device offline) received by the client displays. In the Event Center, you can check the detailed information of the real-time and historical events, view the event linked video, handle the events, and so on.

Before the client can receive the event information from the device, you need to enable the events of the resource and arm the device first. For details, refer to ***Enable Receiving Event from Devices*** .

### 7.10.1 Enable Receiving Event from Devices

Before the client software can receive event notifications from the device, you need to arm the device first.

**Steps**

1. Click → **Tool** → **Device Arming Control** to open Device Arming Control page.

All the added devices appear on this page.

2. In the Auto-Arming column, turn on the switch to enable auto-arming.

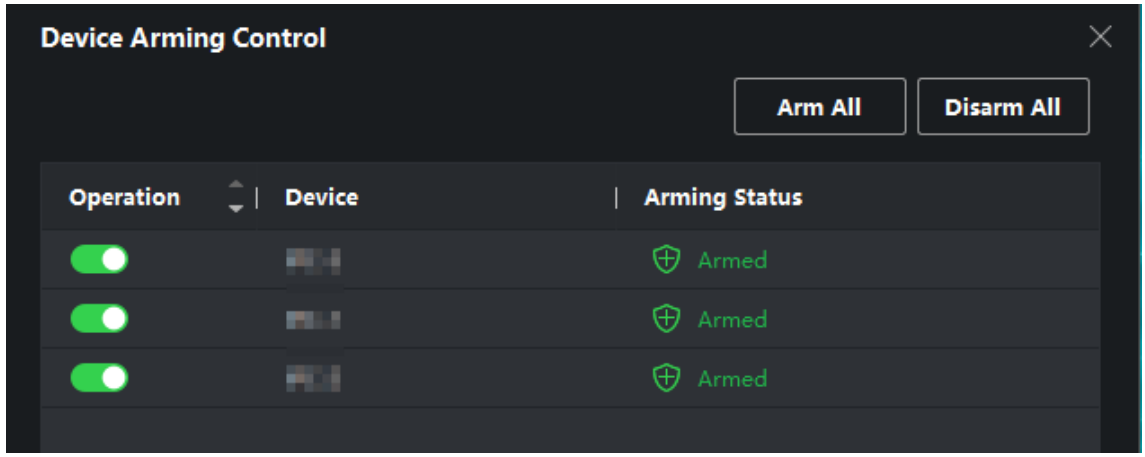


**Figure 7-11 Arm Device**

After turned on, the device(s) will be armed. And notifications about the events triggered by the armed device(s) will be automatically sent to the client software in real-time.

## 7.10.2 View Real-Time Events

The real-time event information received by the client of the connected resources are displayed. You can check the real-time event information, including event source, event time, priority, etc.

**Before You Start**

Enable receiving events from devices before the client can receive event from the device, see ***Enable Receiving Event from Devices*** for details.

**Steps**

1. Click **Event Center → Real-time Event** to enter the real-time event page and you can view the real-time events received by the client.

   **Event Time**

   For encoding device, event time is the client time when it receives the event. For other device types, event time is the time when the event is triggered.

   **Priority**

   Priority represents the emergency degree of the event.

2. Filter the events.

| | |
|---|---|
| **Filter by Device Type and (or) Priority** | Select device type(s) and (or) priorities to filter events. |
| **Filter by Keywords** | Enter the keywords to filter the events. |

3. **Optional:** Right-click the table header of the event list to customize the event related items to be displayed in the event list.

4. Select an event in the event list to view the event details.
5. **Optional:** Perform the following operations if necessary.

| | |
|---|---|
| **Handle Single Event** | Click **Handle** to enter the processing suggestion, and then click **OK**.<br>**Note**<br>After an event is handled, the **Handle** button will become **Add Remark**. Click **Add Remark** to add more remarks for this handled event. |
| **Handle Events in a Batch** | Select events that need to be processed, and then click **Handle in Batch**. Enter the processing suggestion, and then click **OK**. |
| **Enable/Disable Alarm Audio** | Click **Audio On/Mute** to enable/disable the audio of the event. |
| **Select the Latest Event Automatically** | Check **Auto-Select Latest Event** to select the latest event automatically and the event information details is displayed. |
| **Clear Events** | Click **Clear** to clear the all the events in the event list. |
| **Send Email** | Select an event and then click **Send Email**, and the information details of this event will be sent by email.<br>**Note**<br>You should configure the email parameters first, see *Set Email Parameters* in the user manual of the client software for details. |
| **Auto-Play Video** | Check **Auto-Play Video** to automatically play video when displaying event details. |
| **Enlarge Video or Picture** | • Double click the video image to view video in a larger window.<br>• Put the cursor on the picture, and click to view picture in a larger window. |
| **Download Captured Picture** | Hover the cursor on the captured picture, and click the download icon on the lower right corner of the picture to download it to the local PC. |
| **Download Event Triggered Video** | Hover the cursor on the recorded video, click to download the video (30s before the event happens) triggered by the event. |

### 7.10.3 Search Historical Events

You can search and view historical events by setting search conditions such as time, device type, and priority in the client. For the searched events, you can handle and export them.

**Before You Start**

Enable receiving events from devices before the client can receive event information from the device,see ***Enable Receiving Event from Devices*** for details.

**Steps**

1. Click **Event Center → Event Search** to enter the event search page.
2. Set the filter conditions to display the required events only.

   **Time**

   The time when the event starts.

   **Search by**

   **Device**

   Search the events by device or the device's resource channels. If searched by device, you need to set the followings:

   - **Include Sub-Node**: Search the events of the device and all resource channels.
   - **Device Type**: Select the device from which you want to search events.

   **Group**

   Search the events by resource channels in the group.

   **Note**

   - For video intercom device, you need to select search scope: All and Locking Log.
   - For access control device, you can click **Show More** to set more conditions: status, event type, card reader type, person name, card No., and organization.

   **Priority**

   The priority including low, medium, high and uncategorized which indicates the emergency degree of the event.

   **Event Type**

   Select one or more event types to be searched from the drop-down list.

   **Note**

   You can enter a key word (supports fuzzy search) in the search box to search the target event type(s).

   **Status**

   The handling status of the event.

   **Search by Keyword**

   Enter a key word (supports fuzzy search) to quickly search the target historical event(s). For example, you can enter a person's name to search the events related with this person.
3. Click **Search** to search the events according the conditions you set.

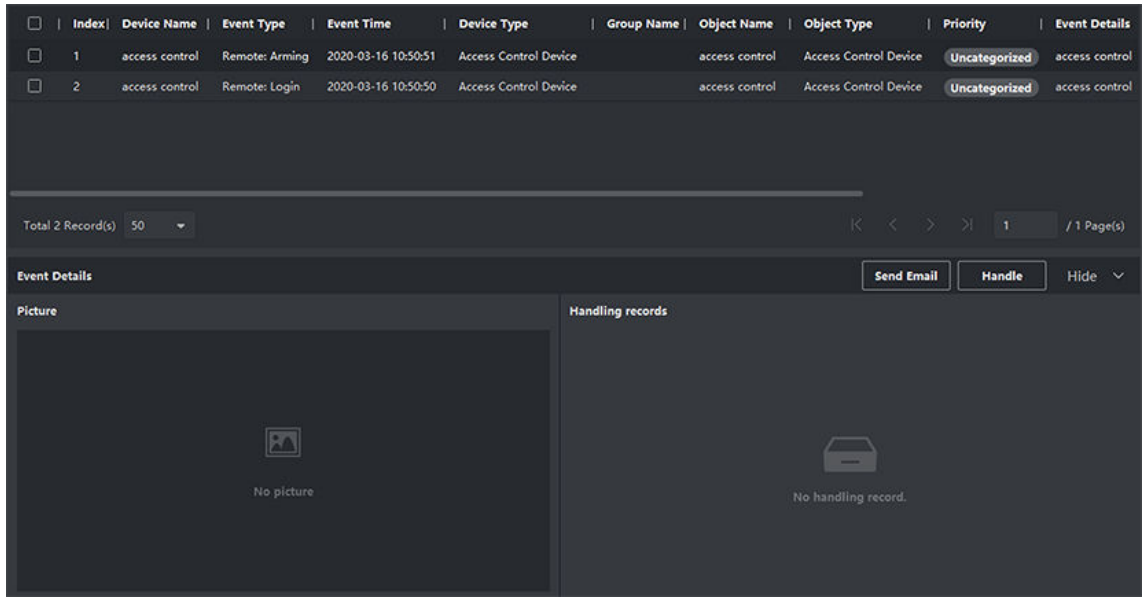


**Figure 7-12 Search Historical Events**

**Note**

If you have selected **Access Control** as device type in Step 2, you can view extra information such as card No., skin-surface temperature, and abnormal temperature (if device supports) in the searched events.

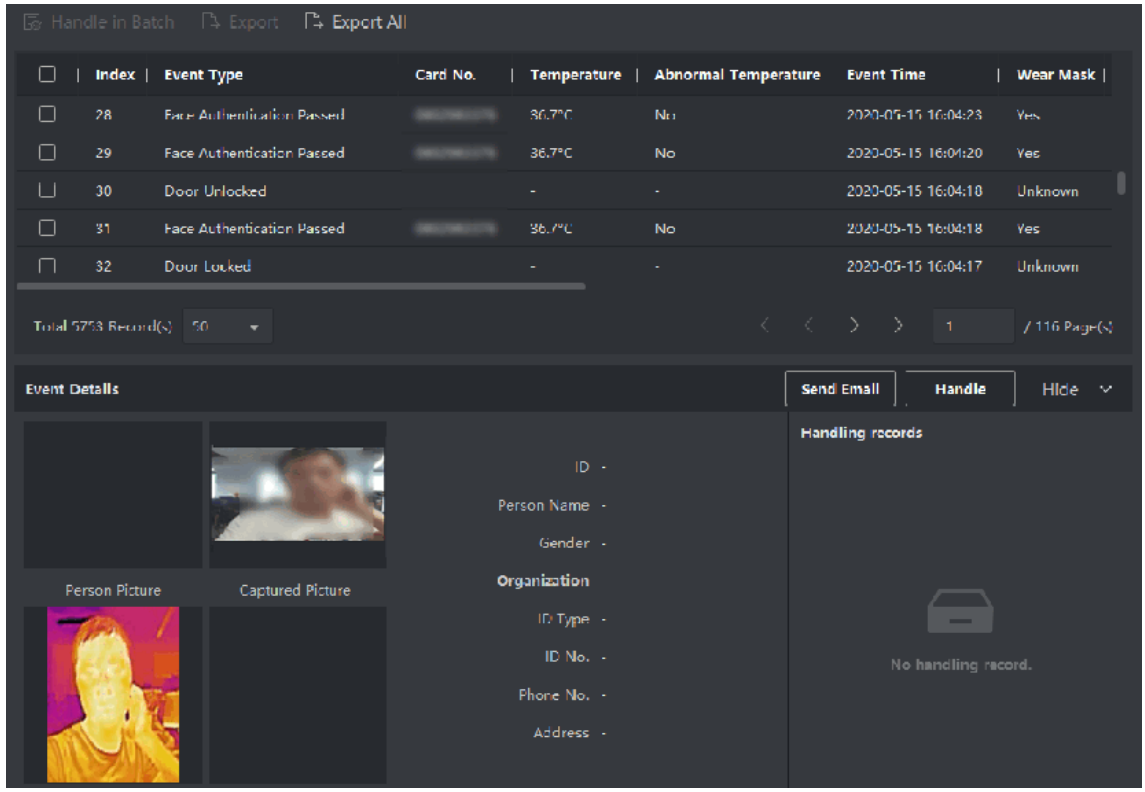


**Figure 7-13 Search Historical Event**

4. **Optional:** Right click the table header of the event list to customize the event related items to be displayed in the event list.
5. Select an event in the event list to view the event details.
6. **Optional:** Perform one of the following operations.

**Handle Single Event**

Handle single event: Select one event that needs to be handled, and then click **Handle** in the event information details page, and enter the handling suggestion.

**Note**

After an event is handled, the **Handle** button will become **Add Remark**, click **Add Remark** to add more remarks for this handled event.

**Batch Handle Events**

Handle events in a batch: Select the events which need to be handled, and then click **Handle in Batch**, and enter the handling suggestion.

**Note**

After an event is handled, the **Handle** button will become **Add Remark**, click **Add Remark** to add more remarks for this handled event.

| | |
|---|---|
| **Auto-Play Video** | Check **Auto-Play Video** to automatically play video when displaying event details. |
| **Enlarge Video or Picture** | • Double click the video image to view video in a larger window.<br>• Put the cursor on the picture, and click to view picture in a larger window. |
| **Send Email** | Select an event and then click **Send Email**, and the information details of this event will be sent by email.<br>**Note**<br>You should configure the email parameters first, see *Set Email Parameters* in the user manual of the client software for details. |
| **Export Event Information** | Click **Export** to export the event log or event pictures to the local PC in CSV/Excel file. You can set the saving path manually. |
| **Download Captured Picture** | Hover the cursor on the captured picture, and click the download icon on the lower right corner of the picture to download it to the local PC. |
| **Download Event Triggered Video** | Hover the cursor on the recorded video, click to download the video (30s before the event happens) triggered by the event. |

## 7.11 Remote Configuration via Client Software

Configure device parameters remotely.

### 7.11.1 Check Device Information

**Steps**

1. Click **Maintenance and Management → Device Management → Device** to enter the device list.
2. Click to enter the remote configuration page.
3. Click **System → Device Information** and view the device basic information and the device version information.

### 7.11.2 Edit Device Name

Click **Maintenance and Management → Device Management → Device** to enter the device list.

Click to enter the remote configuration page.

Click **System → General** to configure the device name and overwrite record files parameter.

Click **Save**.

### 7.11.3 Edit Time

**Steps**

1. Click **Maintenance and Management → Device Management → Device** to enter the device list.
2. Click ⚙ to enter the remote configuration page.
3. Click **System → Time** to configure the time zone.
4. **Optional:** Check **Enable NTP** and set the NTP server address, the NTP port, and the synchronization interval.
5. **Optional:** Check **Enable DST** and set the DST start time, end time and the bias.
6. Click **Save**.

### 7.11.4 Set System Maintenance

You can reboot the device remotely, restore the device to default settings, etc.

**Steps**

1. Click **Maintenance and Management → Device Management → Device** to enter the device list.
2. Click ⚙ to enter the remote configuration page.
3. Click **System → System Maintenance** .
4. Maintain the device.

   **Reboot**

   The device starts rebooting.

   **Restore Default Settings**

   Restore the device settings to the default ones, excluding the IP address.

   **Restore All**

   Restore the device parameters to the default ones. The device should be activated after restoring.
5. Remotely upgrade the device.

   1) In the Remote Upgrade part, select an upgrade type.

   **Note**

   - You need to set the device ID before upgrading if you select Controller Upgrade File as the remote upgrade type.
   - Only the card reader that connected via RS-485 protocol supports upgrading.

   2) Click **...** to select an upgrade file.
   3) Click **Upgrade** to start upgrading.

   **Note**

   Do not power off during the upgrading.

### 7.11.5 Manage Network User

**Steps**

1. Click **Maintenance and Management → Device Management → Device** to enter the device list.
2. Click ⚙ to enter the remote configuration page.
3. Click **System → User → Network User** .
4. Click **Add** to add the user.
5. **Optional:** Select a user in the user list and click **Edit** to edit the user.

   You are able to edit the user password, the IP address, the MAC address and the user permission.
6. Click **OK**.

### 7.11.6 Manage Keyfob User

**Steps**

1. Click **Maintenance and Management → Device Management → Device** to enter the device list.
2. Click ⚙ to enter the remote configuration page.
3. Click **System → User → Keyfob User** .
4. Click **Add** to add the user.
5. Check **Enable** in the pop-up window and set the keyfob's serial No.
6. **Optional:** Enable the Remain Open Status of the turnstile.

   **Note**

   If enabling this function, after the keyfob is matching completed, you can set the barrier as remaining open by using the keyfob.
7. Set the door open direction
8. Click **OK**.

   **Note**

   Up to 32 keyfob users can be added.

### 7.11.7 Set Security

**Steps**

1. Click **Maintenance and Management → Device Management → Device** to enter the device list.
2. Click ⚙ to enter the remote configuration page.
3. Click **System → Security** .
4. Select the density level in the drop-down list.
5. You can select **Compatible Mode** or **Security Mode**.

   **Compatible Mode**

The user information verification is compatible with the old client software version when logging in.

**Security Mode**

High security level during the user information verification when logging in.

6. Click **Save**.

### 7.11.8 Configure Lane Parameters

You can set the passing parameters for a person to pass through the turnstile.

**Steps**

1. Click **Maintenance and Management → Device** to enter the device list.
2. Click to enter the remote configuration page.
3. Click **System → Lane Settings** .
4. Set the lane parameters.

**Door Closing Delay Time**

Set the delayed time duration when barrier is closing. The barrier will be closed after the configured delayed time.

**Max. Intrusion Duration**

If a person has entered the lane or passed through the lane for more than the configured time duration, an alarm will be triggered. 0 represents the function is disabled.

**Note**

The suggested minimum detection time duration is 2 s.

**Overstaying Duration**

If the device detects persons or things staying in the lane for more than the configured time duration, an alarm will be triggered.

**Max IR Obstructed Duration**

Set the maximum time duration for the obstruction of the IR light. If the IR light is obstructed for more than the configured time duration, the alarm will be triggered. 0 represents the function is disabled.

5. Click **Save**.

### 7.11.9 Configure Screen Parameters

The device can connect to a text screen. You can set the display parameters on this page.

**Steps**

1. Click **Maintenance and Management → Device Management → Device** to enter the device list.
2. Click to enter the remote configuration page.

3. Click **System → Screen Configuration** .
4. Set the screen parameters.

**Note**

For better performance, it is suggested to use the default parameters.

**Screen Position**

Select the screen's position on the device. If select **Exit** from the drop-down list, the screen will be installed at the exit position of the device.

**Screen Model**

Select the screen model from the drop-down list.

**Font Size**

Select the text font size in the screen.

**Screen Orientation**

Select the text orientation on the screen.

**Line Space**

Set the space between two lines.

**Column Spacing**

Set the space between two columns.

**Initial Position**

Set the first character's position displayed on the screen.

5. Click **Save**.

### 7.11.10 Configure Screen Parameters

You can set the people counting's parameters and after the configuration.

**Steps**

1. Click **Maintenance and Management → Device Management → Device** to enter the device list.
2. Click to enter the remote configuration page.
3. Click **System → People Counting** .
4. Set the people counting parameters.

**Clear Device People Counting**

Click **Reset** and the counted people number will be restored to zero.

**Device People Counting**

Click **Enable** or **Disable** to enable or disable the people counting function.

**Client Offline People Counting**

Click **Enable** or **Disable** to enable or disable function of the offline people counting on the client.

If enabling the function and if the device is offline, the device will continue counting the people and the number will be stored in the device. When the device is online, the client will read the updated number from the device automatically.

**People Counting Type**

You can select from **Invalid**, **By Detection**, and **By Authentication Number**.

**Invalid**

The device will not count people. If the device people counting function is enabled, the people counting function is still disabled.

**By Detection**

The device will count the people who passing through the device depending on the detection result.

**By Authentication Number**

The device will count the people who authenticating on the device.

The failed authentication will also count as once.

5. Click **Save**.

### 7.11.11 Configure Advanced Network

Click **Maintenance and Management → Device Management → Device** to enter the device list.

Click ⚙ to enter the remote configuration page.

Click **Network → Advanced Settings** and you can configure the DNS IP address 1 and the DNS IP address.

Click **Save** to save the settings.

### 7.11.12 Configure Audio File

You can relate the audio file to the corresponding playing scene. You can also export the audio file from the system and import the audio file from the local.

**Steps**

1. Click **Maintenance and Management → Device Management → Device** to enter the device list.
2. Click ⚙ to enter the remote configuration page.
3. Click **Other → Audio File** .

**Note**

By default, the system contains the audio content. For details about the index related audio content, see ***Table of Audio Index Related Content*** .

4. Select the index (the playing content) corresponded play scene.

5. **Optional:** Input the descriptions of the play scene.
6. Click **Save Parameters** to save the relationship between the index (the playing content) and the play scene.
7. **Optional:** Click **Export** to export the default audio file to the local computer.
8. **Optional:** Click **...** and select audio file from the local computer. Click **Import** to import the file to the device.

**Note**

- The imported audio file should be in MEM format.
- For details about converting other format of the audio file to MEM format, see the audio conversion manual.
- If you use the third part software to create or edit an audio file, the volume of the audio file should be no less than 0 × 68. If the volume is less than the value, it will exceed the loudspeaker's power consumption, so that damage the loudspeaker.

### 7.11.13 Configure Passing Record

You can record and upload passing events.

Click **Maintenance and Management → Device Management → Device** to enter the device list.

Click ⚙ to enter the remote configuration page.

Click **Other → Turnstile Management** .

Check **Enable Passing Record**. After enabled, the device will record and upload passing events.

Click **Save**.

### 7.11.14 Configure Parameters for Lane Controller

After adding the lane controller to the client, you can configure its parameters for passing through the lane.

**Steps**

1. Click **Access Control → Advanced Function → Device Parameter** to enter Parameter Settings page.
2. In the device list on the left, select a lane controller and you can edit the lane controller's parameters on the right.
3. Edit the parameters.

   **Passing Mode**

   Select the controller which will control the barrier status of the device.

- If you select **According to DIP Settings**, the device will follow the controller's DIP settings to control the barrier. The settings on the software will be invalid.
- If you select **According to Door's Schedule Settings**, the device will follow the schedule configured in the client software to control the barrier. The DIP settings of the controller will be invalid.

**Enable Free Passing Authentication**

After enabling free passing authentication, an alarm will be triggered when the passing personnel has no permission to pass through.

**Opening/Closing Barrier Speed**

Set the barrier's opening and closing speed. You can select from 1 to 10. The greater the value, the faster the speed.

**Note**

The recommended value is 6.

**Alarm Voice Prompt Duration**

Set how long the audio will last, which is played when an alarm is triggered.

**Note**

0 refers to the alarm audio will be played until the alarm is ended.

**Temperature Unit**

Select the temperature unit that displayed in the device status.

**Lightboard Brightness**

Set the lightboard brightness.

**Barrier Material**

Select the material of the barrier gate. You can select the barrier material from the drop-down list.

**Note**

The barrier material will affect the device working. Select a correct barrier material or the barrier may not open.

**Lane Length**

The width of the lane. You can set the lane width.

**Note**

The lane width will affect the device working. Set a correct lane width or the barrier may not open.

**Do Not Open Barrier When Lane is Not Clear**

If there is someone or something in the lane, the gate will not open even if the credential is authenticated.

This function is designed to avoid more than one person passing through the gate with only one authentication.

4. Click **OK**.

### 7.11.15 Configure IR Detectors

You can set anti-pinch for barrier closing, inductive mode and IR mode.

**Steps**

1. Click **Maintenance and Management → Device** to enter the device list.
2. Click ⚙ to enter the remote configuration page.
3. Click **Other → Turnstile Module Management** .
4. Check to enable **Custom Anti-Pinch for Barrier Closing**. When the device detects that there are people staying in the lane, the barrier will not close. After enabled, you can uncheck some IR beam No., allowing the barrier to close early. However, when the barrier is opened or closed, it may cause injury to pedestrians.
5. Select **Inductive Mode (Entrance)**, **Inductive Mode (Exit)**.
6. Select **IR Mode**. When you select **Panic Mode**, you can uncheck the damaged IR beam No. and temporarily restore the lane to normal use. However, when the barrier is opened or closed, it may cause injury to pedestrians.
7. Click **Save**.

### 7.11.16 View Relay Status

Click **Maintenance and Management → Device Management → Device** to enter the device list.

Click ⚙ to enter the remote configuration page.

Click **Status → Relay** and you can view the relay status.

# Appendix A. Tips for Scanning Fingerprint

## Recommended Finger

Forefinger, middle finger or the third finger.

## Correct Scanning

The figure displayed below is the correct way to scan your finger:

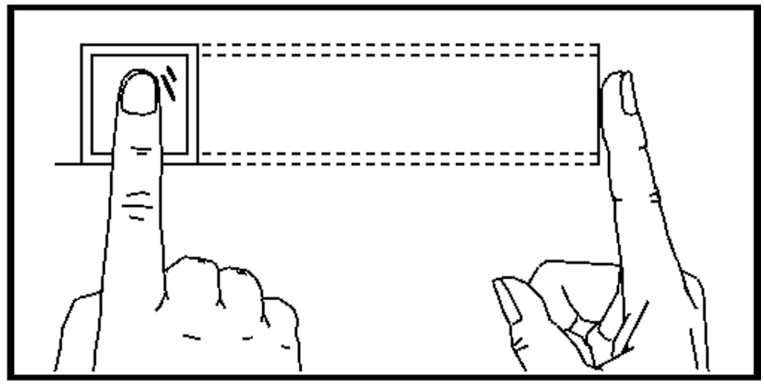

You should press your finger on the scanner horizontally. The center of your scanned finger should align with the scanner center.

## Incorrect Scanning

The figures of scanning fingerprint displayed below are incorrect:

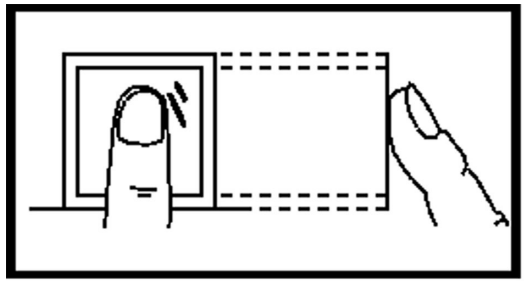

Vertical

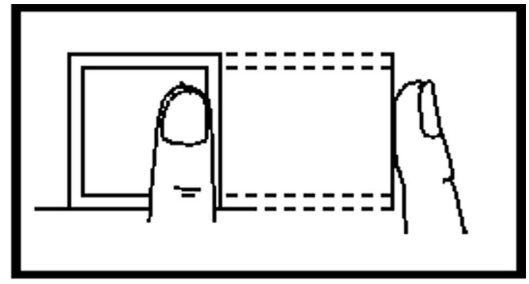

Edge I

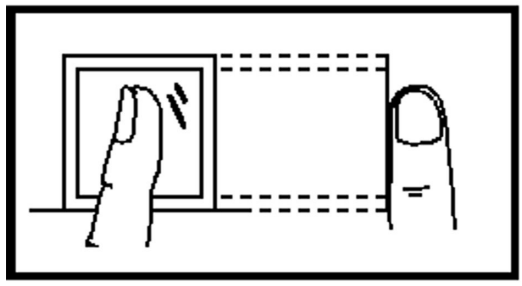

Side

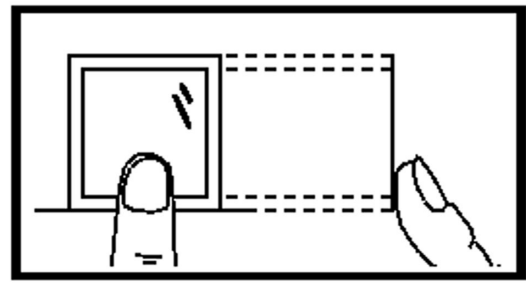

Edge II

## Environment

The scanner should avoid direct sun light, high temperature, humid conditions and rain.
When it is dry, the scanner may not recognize your fingerprint successfully. You can blow your finger and scan again.

## Others

If your fingerprint is shallow, or it is hard to scan your fingerprint, we recommend you to use other authentication methods.
If you have injuries on the scanned finger, the scanner may not recognize. You can change another finger and try again.

# Appendix B. DIP Switch

## B.1 DIP Switch Description

The DIP switch is on the main lane control board. No.1 to No 8 is from the low bit to the high bit.

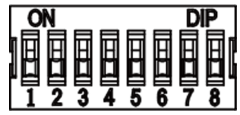


When the switch is towards ON, it means the switch is enabled, otherwise, the switch is off. If you set the DIP switch like the figure displayed below, its binary value is 00001100, and its decimal value is 12.

## B.2 DIP Switch Corresponded Functions

**Note**

After setting the DIP switch, you should reboot the device, or the function cannot take effect.

The 8-bit DIP switch corresponded functions on the access control board are as follows:

| Bit | Device Mode | Function | Decimal Value | Binary Value |
|---|---|---|---|---|
| 1 to 2 | Work Mode | Normal Mode | 0 | 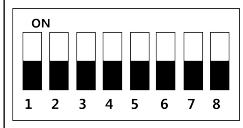 |
| | | Test Mode | 2 | |
| 3 | Memory Mode | Enable Memory Mode | 0 | |
| | | Disable Memory Mode | 1 | |

| Bit | Device Mode | Function | Decimal Value | Binary Value |
|---|---|---|---|---|
| 4 | Keyfob Paring Mode | Enable Keyfob Paring Mode | 1 | |
| | | Disable Keyfob Paring Mode | 0 | 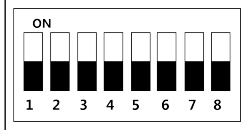 |
| 5 to 8 | Passing Mode | Controlled Bi-direction | 0 | 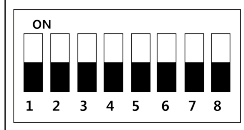 |
| | | Controlled Entrance and Prohibit Exit | 1 | 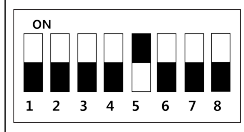 |
| | | Controlled Entrance and Free Exit | 2 | 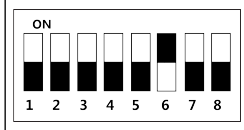 |
| | | Free Bi-direction | 3 | |
| | | Free Entrance and Controlled Exit | 4 | 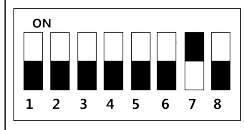 |
| | | Free Entrance and Prohibit Exit | 5 | 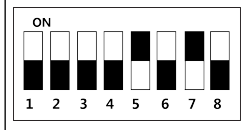 |
| | | Prohibited Bi-direction | 6 | 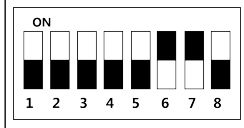 |
| | | Prohibit Entrance and Controlled Exit | 7 | 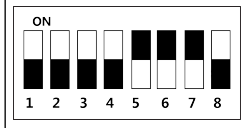 |
| | | Prohibit Entrance and Free Exit | 8 | 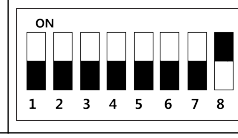 |

# Appendix C. Event and Alarm Type

| Event | Alarm Type |
|---|---|
| Tailgating | Visual and Audible |
| Reverse Passing | Visual and Audible |
| Force Accessing | None |
| Climb over Barrier | Visual and Audible |
| Overstay | Visual and Audible |
| Passing Timeout | None |
| Intrusion | Visual and Audible |
| Free Passing Authentication Failed | Visual |
| Barrier Obstructed | None |

# Appendix D. Table of Audio Index Related Content

| Index | Content |
|---|---|
| 1 | Authenticated. |
| 2 | Card No. does not exist. |
| 3 | Card No. and fingerprint mismatch. |
| 4 | Climbing over the barrier. |
| 5 | Reverse passing. |
| 6 | Passing timeout. |
| 7 | Intrusion. |
| 8 | Force accessing. |
| 9 | Tailgating. |
| 10 | No permissions. |
| 11 | Authentication time out. |
| 12 | Authentication failed. |
| 13 | Expired card. |
| 14 | Staying out of time. |

# Appendix E. Error Code Description

The swing barrier will display the error code on the seven-segment display if error occurred. Refer to the table below to find the description of each number.

| Error Reason | Code | Error Reason | Code |
|---|---|---|---|
| Normal Working | 00 | Lower Fifth IR Beam Triggered | 21 |
| First IR Beam Triggered | 01 | Lower Sixth IR Beam Triggered | 22 |
| Second IR Beam Triggered | 02 | Lower Seventh IR Beam Triggered | 23 |
| Third IR Beam Triggered | 03 | Lower Eighth IR Beam Triggered | 24 |
| Fourth IR Beam Triggered | 04 | Lower Ninth IR Beam Triggered | 25 |
| Fifth IR Beam Triggered | 05 | Lower Tenth IR Beam Triggered | 26 |
| Sixth IR Beam Triggered | 06 | Lower Eleventh IR Beam Triggered | 27 |
| Seventh IR Beam Triggered | 07 | Lower Twelfth IR Beam Triggered | 28 |
| Eighth IR Beam Triggered | 08 | Lower Thirteenth IR Beam Triggered | 29 |
| Ninth IR Beam Triggered | 09 | Lower Fourteenth IR Beam Triggered | 30 |
| IR Beam Triggered | 10 | Lower Fifteenth IR Beam Triggered | 31 |
| Eleventh IR Beam Triggered | 11 | Lower Sixteenth IR Beam Triggered | 32 |
| Twelfth IR Beam Triggered | 12 | Light Board Offline (Entrance) | 49 |
| Thirteenth IR Beam Triggered | 13 | Light Board Offline (Exit) | 50 |
| Fourteenth IR Beam Triggered | 14 | IR Adapter Offline (Up) | 51 |
| Fifteenth IR Beam Triggered | 15 | IR Adapter Offline (Low) | 52 |
| Sixteenth IR Beam Triggered | 16 | CAN Bus Exception | 53 |
| Lower First IR Beam Triggered | 17 | Not Studying | 54 |

| Error Reason | Code | Error Reason | Code |
|---|---|---|---|
| Lower Second IR Beam Triggered | 18 | Obstruction | 55 |
| Lower Third IR Beam Triggered | 19 | Exceeding Studying Range | 56 |
| Lower Fourth IR Beam Triggered | 20 | Motor Exception | 57 |

# Appendix F. Communication Matrix and Device Command

## Communication Matrix

Scan the following QR code to get the device communication matrix.
Note that the matrix contains all communication ports of Hikvision access control and video intercom devices.

**Figure F-1 QR Code of Communication Matrix**

## Device Command

Scan the following QR code to get the device common serial port commands.
Note that the command list contains all commonly used serial ports commands for all Hikvision access control and video intercom devices.

**Figure F-2 Device Command**

See Far, Go Further